IR series

Sealed pushbutton switches - bushing Ø 16 mm - momentary - standard version

Distinctive features and specifications





- ❑ **Screw version up to 4A**
- ❑ **Tactile feedback**
- ❑ **Sealed to IP67**
- ❑ **Illuminated or non-illuminated**
- ❑ **Flat round actuator for optional marking**

ENVIRONMENTAL SPECIFICATIONS

- Front panel sealing : IP67 according to IEC 60529
- Shock resistance : 100 g according to IEC 512-4, test 6c
- Vibration resistance : 10-500Hz - 10 g according to IEC 512-4, test 6d
- Salt spray : IEC 512-6, test 11f
- Operating temperature : -40°C to +85°C

ELECTRICAL SPECIFICATIONS

- Max. current/voltage rating with resistive load :
  - Gold plated silver contacts (code 4) : 200mA 48VDC - 200mA 250VAC
  - Silver contacts (code 2) - screw terminals : 2A 250VAC - 4A 48VDC
- Electrical life at full load : 500.000 cycles
- Initial contact resistance : 100 mΩ max.
- Insulation resistance : 1 GΩ min. at 500VDC
- Dielectric strength : 1.500 Vrms

LED COMPONENT SPECIFICATIONS

LED colour	Forward current	Typ. forward voltage	Max. forward voltage
Super red (L0S)	20mA	2,1V	2,3V
Yellow (L0Y)	20mA	2,1V	2,3V
Green (L0G)	20mA	2,1V	2,3V
Blue (L0B)	20mA	3,2V	3,8V
White (L0W)	20mA	3,35V	4,25V

A resistor must be series-connected by the user.

Resistor value = $\frac{\text{supply voltage - LED forward voltage}}{\text{LED forward current}}$

On flying lead versions, the LED resistor can be integrated by APEM on request.

GENERAL SPECIFICATIONS

- Panel thickness : 8 mm (.314) max.
- Total travel : 1,6 mm (.062) +/- 0,3 mm
- Typical operating force : 4N +/- 2N
- Mechanical life : 1.000.000 cycles
- Torque : 0,8 Nm max. applied to nut
- Soldering : 320°C max. for 3 sec.

MATERIALS

- Case : thermoplastic UL94-V0
- Actuator : polyamide 6/6
- Bushing/bezel : polyamide 6/6
- Contacts :
  4 : silver, gold plated
  2 : silver (screw terminals)
- Multi-wire lead AWG20, section 0,6 mm²
- LED wire : AWG26, section 0,12 mm²
- Lens : polycarbonate
- Terminal seal : epoxy

PANEL CUT-OUT

① Flat seal

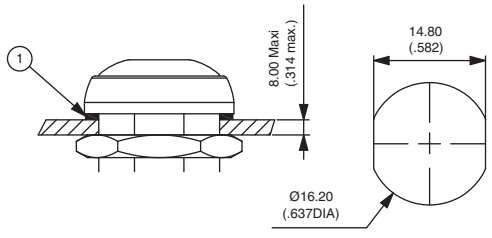

MATRIX MOUNTING

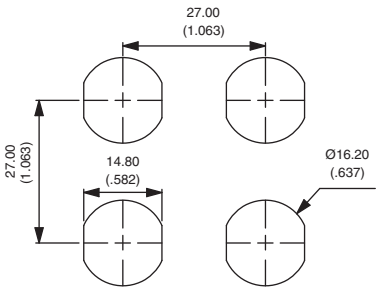

IR series

Sealed pushbutton switches - bushing Ø 16 mm - momentary - standard version

Overview

MODEL STRUCTURE

IR

SERIES

Actuator shape

- **C** Square
- **R** Round, curved
- **P** Round, flat

Electrical function

- **3** Normally open (NO)

Terminals

- **S** Solder lugs
- **F** Flying leads
- **P** Straight PC
- **Z** Quick-connect (non-illuminated)
- **V** Screw (non-illuminated)

Contacts

- **4** Silver, gold plated
- **2** Silver (screw terminals only)

OPTIONS

Actuator colour

- **1** Blue
- **B** Dark blue
- **2** Black
- **3** Green
- **5** Yellow
- **6** Red
- **7** White
- **9** Orange

Other : on request.

Bushing & bezel finish

- **2** Black (std)
- **7** White

Other : on request.

LED colour

- **Blank** Non-illum.
- **L0S** Super red
- **L0Y** Yellow
- **L0G** Green
- **L0B** Blue
- **L0W** White

ABOUT THIS SERIES

On the following pages, you will find successively :
model structure of switches and options in the same order as in above chart

NOTICE : please note that not all combinations of above numbers are available.
Refer to the following pages for further information.

Mounting accessories : Standard hardware supplied : 1 hex nut 19 mm (.748) across flats and 1 flat seal Hex nut P/N U4116.

Packaging unit : 25 pieces for flying lead models - 40 pieces for other models

IR series

Sealed pushbutton switches - bushing Ø 16 mm - momentary - standard version

Round - illuminated

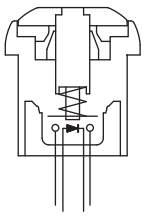

Function 3 (NO)

- Five LED colours
- Tin plated LED terminals
- Gold plated contacts

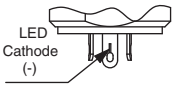

MODEL STRUCTURE

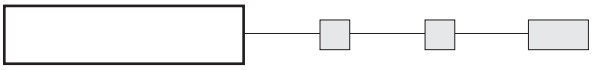

Actuator marking available on IRP models (symbol 12 mm max.). On request.

Solder lug terminals



Curved actuator **IRR3S4**  Normally Open

Flat actuator **IRP3S4**  Normally Open

Also available with straight PC terminals : **IR•3P4**.
LED colour is indicated by the bottom of the switch.

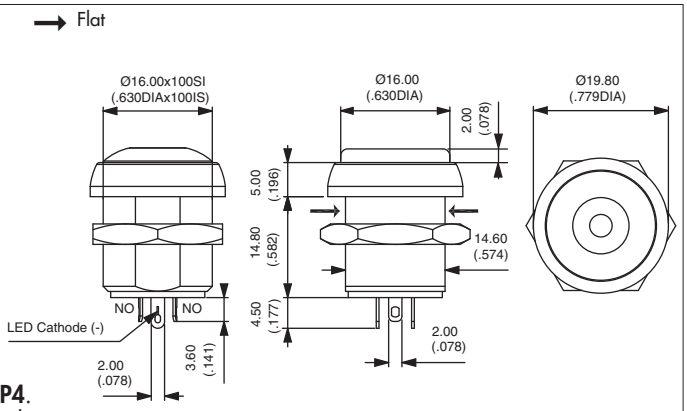

Sealed flying lead terminals



Curved actuator **IRR3F4**  Normally Open

Flat actuator **IRP3F4**  Normally Open

Wire colours : black : NO contact,
red : LED anode (+), blue : LED cathode (-)

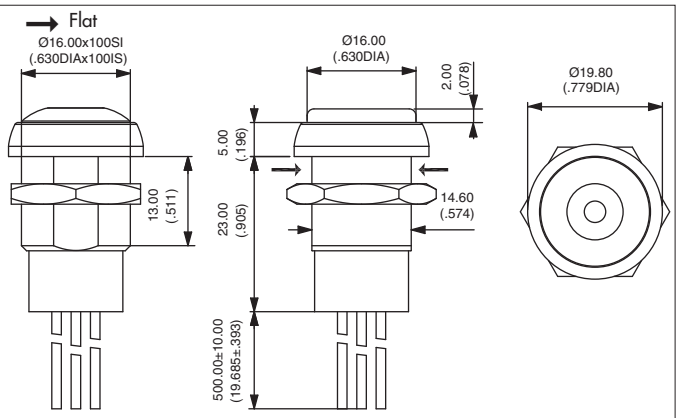

ACTUATOR COLOUR

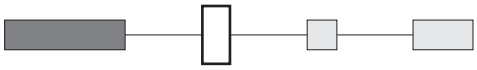

1 : blue - **B** : dark blue - **2** : black - **3** : green - **5** : yellow - **6** : red - **7** : white - **9** : orange

BUSHING AND BEZEL FINISH

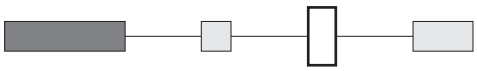

2 : black (standard) - **7** : white

LED COLOUR

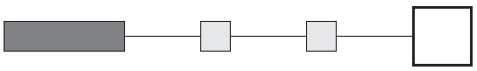

L0S : super red - **L0Y** : yellow - **L0G** : green - **L0B** : blue
L0W : white

IR series

Sealed pushbutton switches - bushing Ø 16 mm - momentary - standard version

Round - non-illuminated

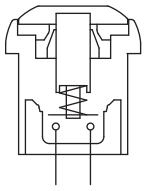

Function 3 (NO)

Straight **P** Quick-connect **Z**

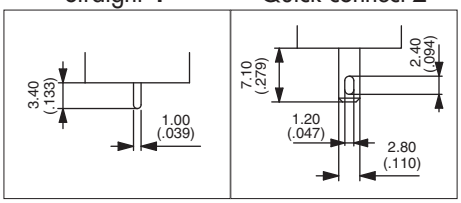

MODEL STRUCTURE

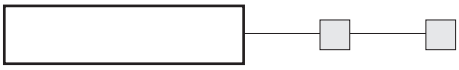

Actuator marking available on IRP models (symbol 12 mm max.). On request.

Solder lug terminals - gold plated contacts



Curved actuator
IRR3S4 Normally open

Flat actuator
IRP3S4 Normally open

Also available with straight PC terminals :
IR•3P4 and quick-connect terminals : **IR•3Z4**.

→ Flat

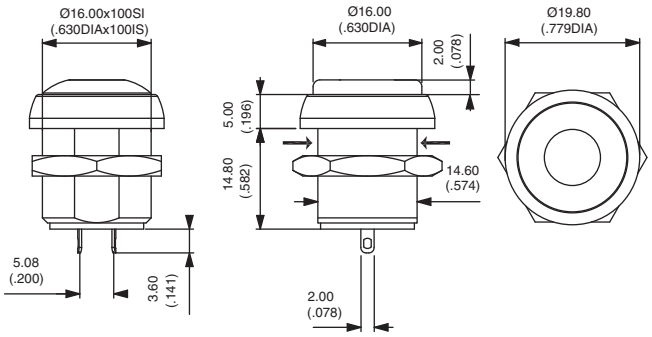

Sealed flying lead terminals - gold plated contacts



Curved actuator
IRR3F4 Normally open

Flat actuator
IRP3F4 Normally open

→ Flat

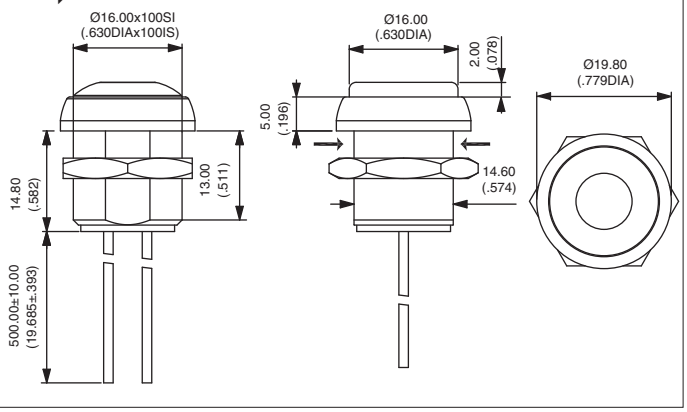

Screw terminals - silver contacts



Curved actuator
IRR3V2 Normally open

Flat actuator
IRP3V2 Normally open

→ Flat

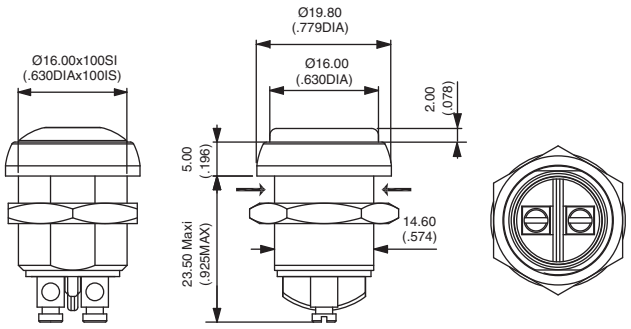

Actuator colour and bushing/bezel finish : select the desired codes on previous page.

IR series

Sealed pushbutton switches - bushing Ø 16 mm - momentary - standard version

Square - illuminated

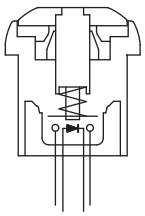

Function 3 (NO)

- Five LED colours
- Tin plated LED terminals
- Gold plated contacts

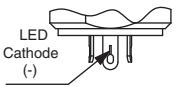

MODEL STRUCTURE

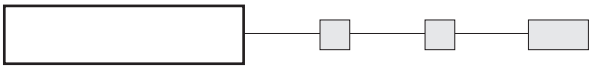

Solder lug terminals



IRC3S4



Normally Open

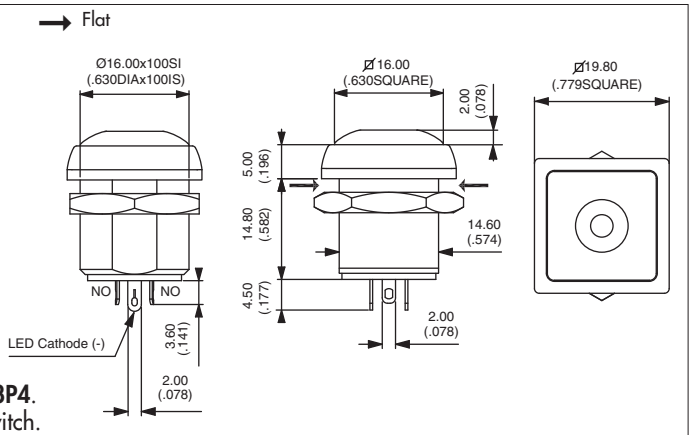

Also available with straight PC terminals : **IRC3P4**.
LED colour is indicated by the bottom of the switch.

Sealed flying lead terminals



IRC3F4



Normally Open

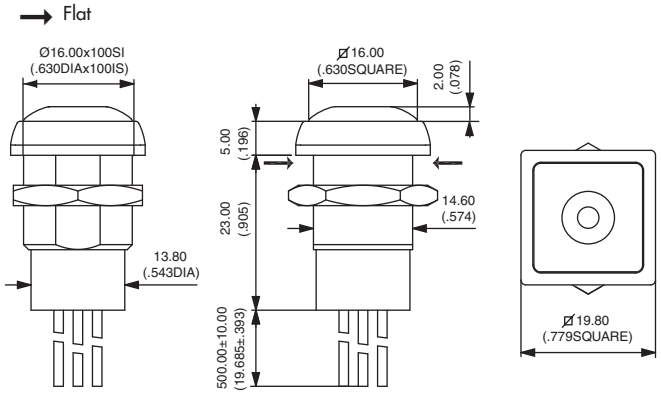

Wire colours : black : NO contact,
red : LED anode (+), blue : LED cathode (-)

ACTUATOR COLOUR

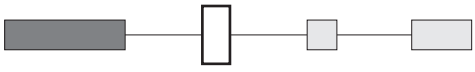

1 : blue - **B** : dark blue - **2** : black - **3** : green - **5** : yellow - **6** : red - **7** : white - **9** : orange

BUSHING AND BEZEL FINISH

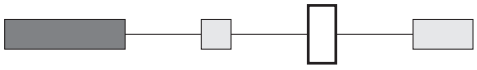

2 : black (standard) - **7** : white

LED COLOUR

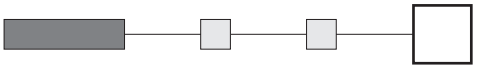

L0S : super red - **L0Y** : yellow - **L0G** : green - **L0B** : blue
L0W : white

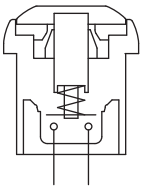

Function 3 (NO)

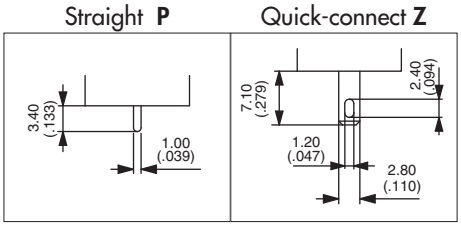

MODEL STRUCTURE

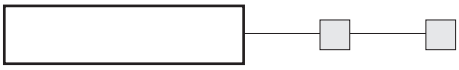

Solder lug terminals - gold plated contacts

→ Flat



IRC3S4 Normally Open

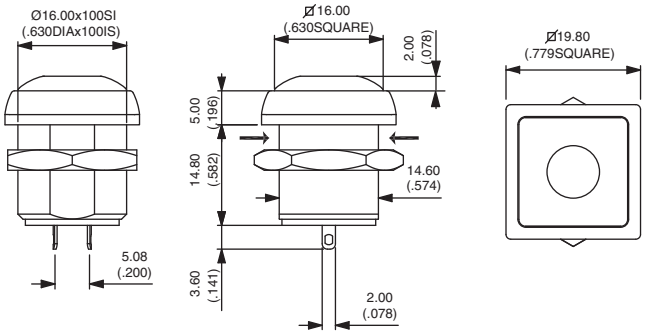

Also available with straight PC terminals : **IRC3P4** or quick-connect terminals : **IRC3Z4**.

Sealed flying lead terminals - gold plated contacts

→ Flat



IRC3F4 Normally Open

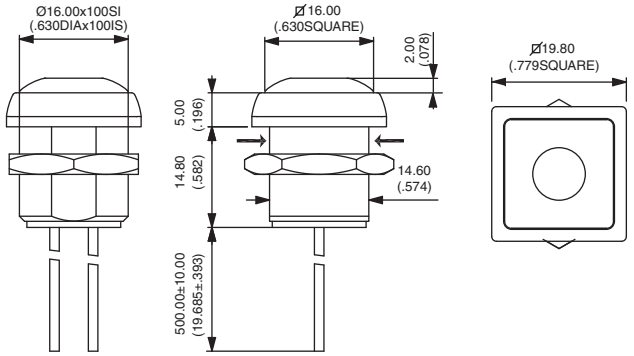

Screw terminals - silver contacts

→ Flat



IRC3V2 Normally Open

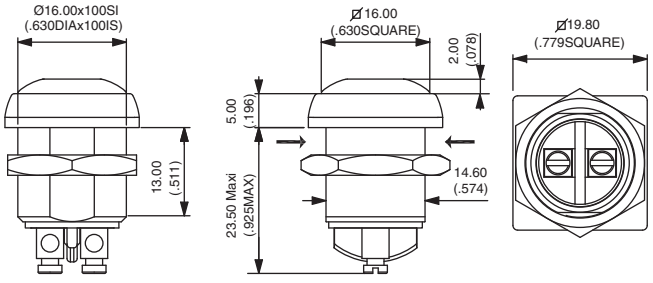

Actuator colour and bushing/bezel finish : select the desired codes on previous page.