Signal tower / Pre-assembled Signal Tower

Fixing bracket BK



Part No.:	**975.883.41**
Series:	**KombiSIGN 72**

MECHANICAL DATA	
Length	138 mm
Width	125 mm
Height	50 mm
Housing colour	Black
Weight with packaging	320 g
Product weight	320 g

APPROVAL DATA	
Conforms with CE	No
WEEE	No
Conforms with RED directive	No
Conforms with CCC	No
Conforms with FCC	No
Conforms with IC	No
EAC certificate available	No
Conforms with UKCA (Importer)	No
Conforms with CMIM	No
Conforms with AS-I	No
Conforms with DNV	No
Conforms with RoHS CN	No
Conforms with VdS	No

! For additional installation and mounting information, refer to the appropriate user guide at www.werma.com. This printed copy is for information only and is subject to alteration.

Signal tower / Pre-assembled Signal Tower

Fixing bracket BK

DRAWING

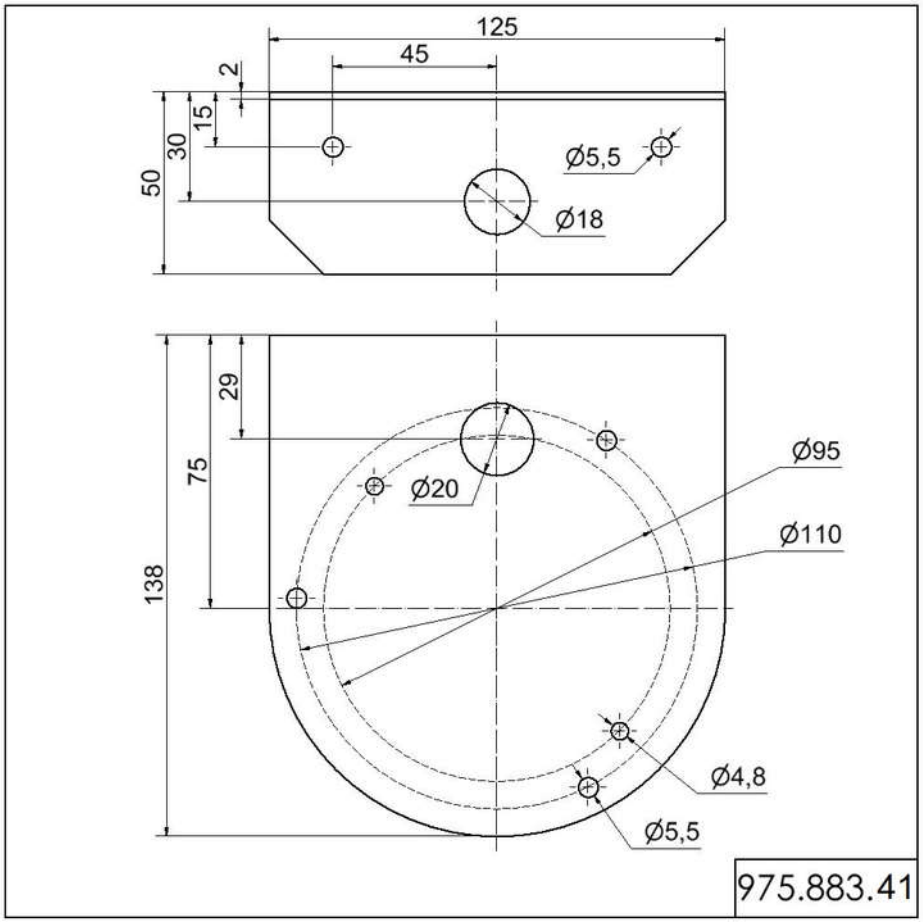

! For additional installation and mounting information, refer to the appropriate user guide at www.werma.com. This printed copy is for information only and is subject to alteration.