DPM 742-BL

4-20mA Loop Powered Indicator with Backlighting

PRODUCT DESCRIPTION

The DPM 742-BL gives an accurate, zero adjusted indication of a 4-20mA current. Calibration is by three multi-turn potentiometers which allow sensitive adjustment of the instrument over a very wide range. Decimal points are jumper link selectable. A low drift bandgap reference circuit ensures accurate readings over a wide temperature range. LED backlighting ensures excellent readability under low light conditions. Connection is via screw terminals. The module's low cost means it will suit high and low volume applications. This module is supplied with a plastic mounting bezel. A waterproof seal to IP67 / NEMA 4X is achievable, using the optional BEZ 700-IP metal bezel.

FEATURES

- 12.7 mm (0.5") Digit Height
- 4-20mA Loop Powered Indication
- Low Volt Drop
- Programmable Decimal Points
- LED Backlighting (30mA @ 5V typ.)
- Bandgap Reference
- Wide Adjustment Range
- Auto-polarity on Display
- IP67 / NEMA 4X Protection via BEZ 700-IP



ORDERING INFORMATION

	Stock Number
Standard Meter	DPM 742-BL
IP67 / NEMA 4X Bezel	BEZ 700-IP

ELECTRICAL SPECIFICATIONS

Specification	Min.	Typ.	Max.	Unit
Accuracy (overall error) *	0.05		0.1	% (± 1 count)
Linearity			±1	count
Sample rate		2.5		samples/sec
Operating temperature range	0		50	°C
Temperature stability		200		ppm/°C
Loop Volt Drop	5	5.6		V
Supply current	4		20	mA
Backlight supply voltage	4.75	5.0	**	V d.c.
Backlight supply current @ 5V d.c.		30	50***	mA
Full scale reading (@ 20mA)	0		1999	Count
Offset adjustment range	-1900		+ 1900	Count

* To ensure maximum accuracy, re-calibrate periodically.
** An external series resistor is required above 5V, see Applications.
*** This specification linearly derates to 30mA @ 50°C.

LASCAR ELECTRONICS LTD.
MODULE HOUSE
WHITEPARISH
WILTSHIRE SP5 2SJ
UK
TEL: +44 (1794) 884567
FAX: +44 (1794) 884616
E-MAIL: sales@lascar.co.uk

LASCAR ELECTRONICS INC.
4258 WEST 12th STREET
ERIE
PA 16505
USA
TEL: +1 (814) 835 0621
FAX: +1 (814) 838 8141
E-MAIL: us-sales@lascarelectronics.com

LASCAR ELECTRONICS (HK) LTD.
8th FLOOR, CHINA AEROSPACE CENTRE,
143 HOI BUN ROAD,
KWUN TONG, KOWLOON,
HONG KONG
TEL: +852 2389 6502
FAX: +852 2389 6535
E- mail: saleshk@lascar.com.hk

Specifications liable to change without prior warning DPM 742-BL Issue 7 04/2018 C.H. Applies to DPM 742-BL/3

DIMENSIONS

All dimensions in mm (inches)

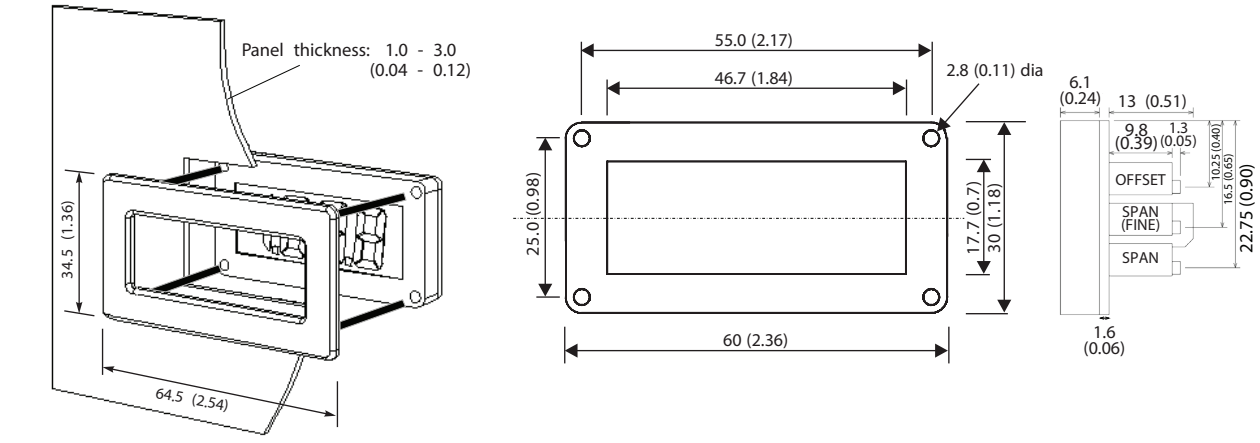

Panel cut-out: 62.0 - 32.0
(2.44 - 1.26)

PANEL FITTING

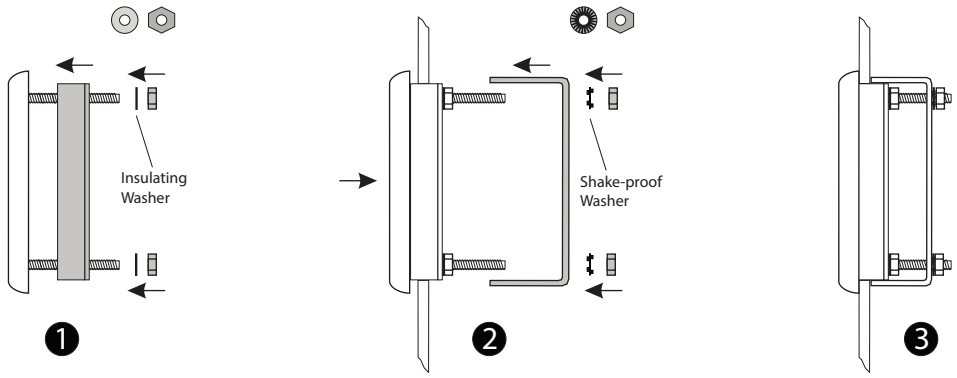

FUNCTIONAL BLOCK DIAGRAM

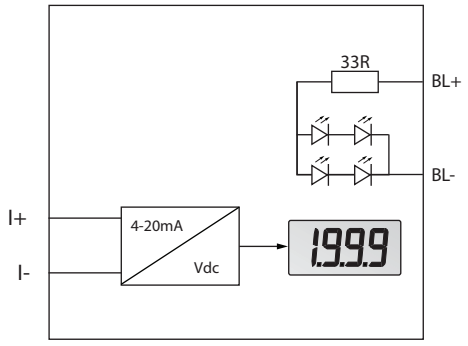

CONNECTIONS (rear view)

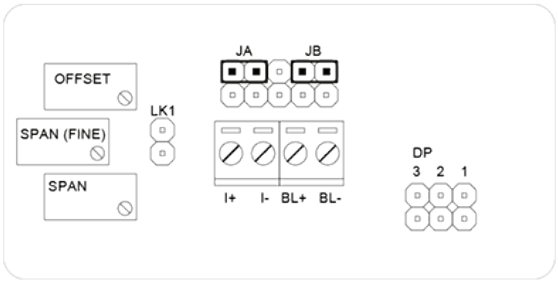

CIRCUIT DIAGRAM

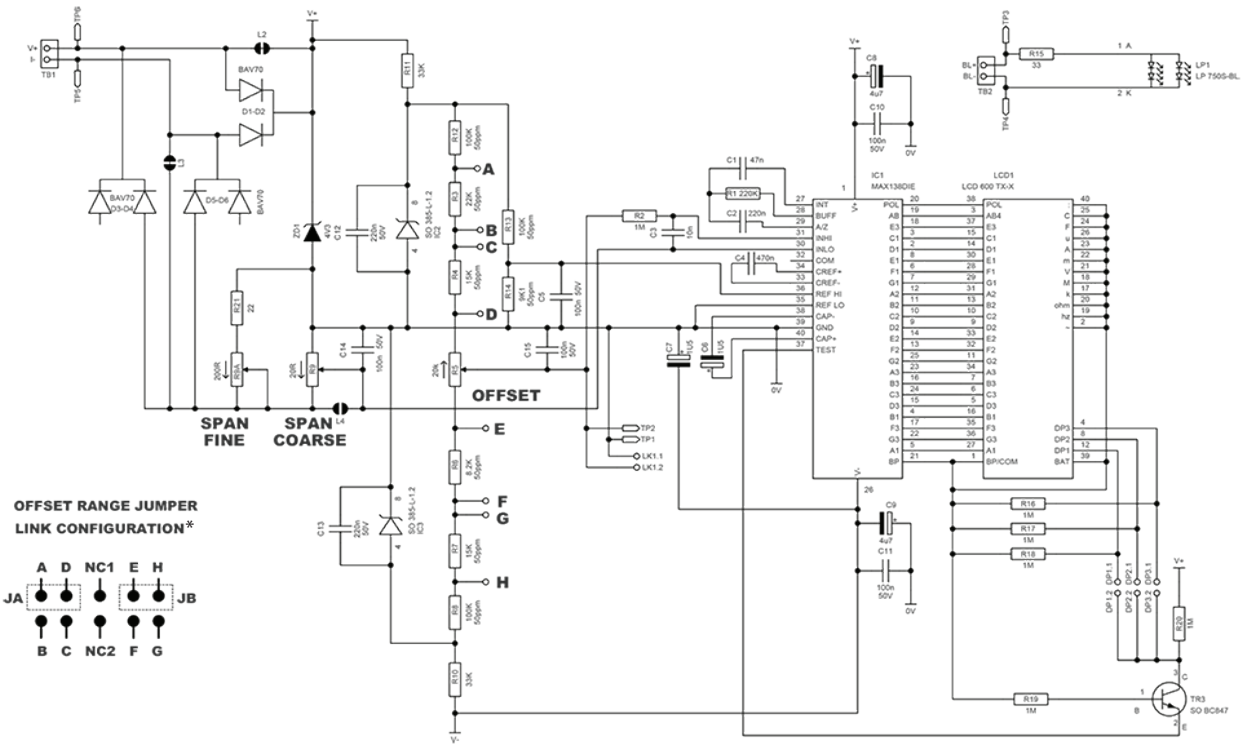

*By applying one link across A-B, C-D, E-F or G-H, the Offset range can be altered.

SCREW TERMINAL FUNCTIONS

I+ Positive current input.
I- Negative current input.
BL+ Positive power supply connection to the LED backlighting.
BL- Negative power supply connection to the LED backlighting.

CALIBRATION

To re-calibrate, place the Jumper Link across LK1. This disables the Offset adjustment to enable Span adjustment to be made first. After Span adjustment is complete, the Jumper Link is removed and the Offset adjustment is made. The Jumper Link is then used to display one of the decimal points if necessary.

Example to re-calibrate: Meter to read -40.0 at 4mA and 150.0 at 20mA.

1. Calculate the Span by subtracting the desired reading at 4mA from the desired reading at 20mA: 1500 - (-400) = 1900
2. Place Jumper Link Lk1 with the link header normally used to select the desired Decimal Point. Link Lk1 is located to the left of the screw terminals.
3. Apply 16mA between the + and - screw terminals.
4. Set the Fine Span control to approximately mid-way. Set the Coarse Span adjustment to give a reading of 1900. Use the Fine Span control as necessary to get a precise reading.
5. Remove Jumper Link Lk1 and place it back on the desired Decimal Point (DP1 in this case).
6. Apply 4mA between the - and + screw terminals.
7. Adjust the Offset potentiometer so the DPM 742-BL indicates the desired reading at 4mA: -40.0
8. Adjust Span and Offset as necessary for optimum accuracy. First apply 20mA and adjust Span untill the reading is 150.0. Then apply 4mA and adjust Offset untill the reading is -40.0. Repeat step 8 until correct readings are obtained at 4mA and at 20mA.

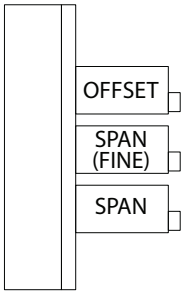

JUMPER LINKS

DP1	Displays decimal point DP1 (199.9).
DP2	Displays decimal point DP2 (19.99).
DP3	Displays decimal point DP3 (1.999).
Lk1	Used during calibration (see above).

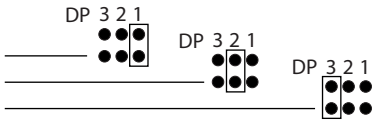

APPLICATIONS

The DPM 742-BL is powered from the 4-20mA signal loop and needs no other power supply. The LED backlighting requires a separate d.c. power supply. Ensure correct polarity when connecting.

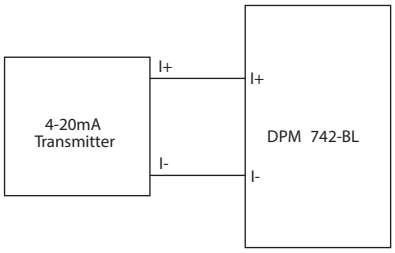

Measuring a 4-20mA loop current.

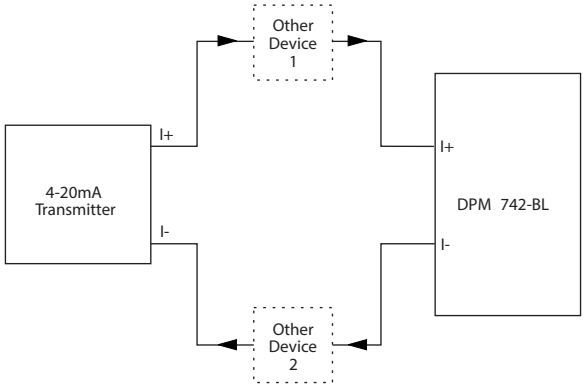

Measuring a 4-20mA loop current with other devices in the loop.

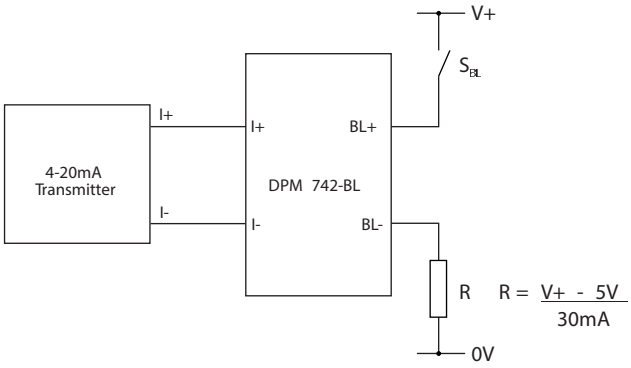

Measuring a 4-20mA loop current with LED Backlighting switched on.

Note:
If the backlighting supply voltage (V+ - 0V) = 5V, then no resistor R is required, and connect BL- to 0V.