E40182

Process adapter for small volumetric flow quantities

ADAPTBLOCK D16 G1/2 PVC

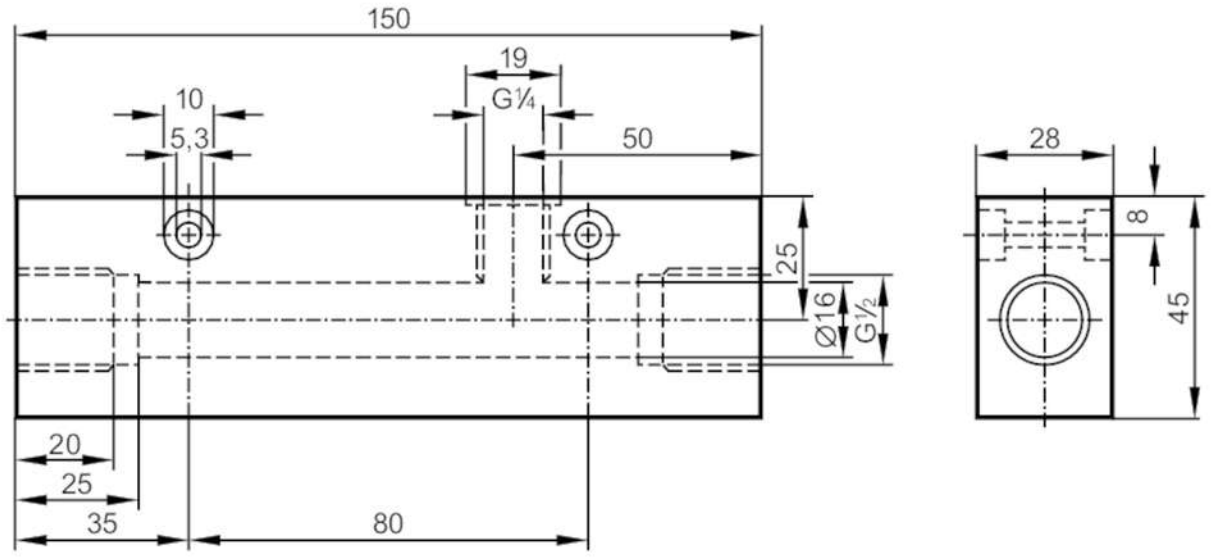

Application		
Design		for flow sensors SID, SF5
Flow range	[l/min]	0.5...5; ((SI1xxx); 0.5...7 (SI5xxx); factory setting with water)
Application		for industrial applications
Media		liquids and gases
Medium temperature	[°C]	-25...60
Pressure rating	[bar]	6
Tests / approvals		
Pressure Equipment Directive EAC		The adapter is intended for use in devices, machines and installations that do not fall under the categories of the technical rule TR CU 032/2013.
Mechanical data		
Weight	[g]	375.5
Materials		PVC
Sensor connection		M18 x 1,5
Process connection		G 1/2
Accessories		
Items supplied		Adapter: 1 x G1/4 BSPP, E40099 sealings: 1, U-seal
Remarks		
Remarks		Can only be used in combination with the flow sensor’s relative operating mode.
Pack quantity		1 pcs.