Double-Ended Cordsets

BCC M313-M323-30-300-PX0334-010
Order Code: BCC02RH

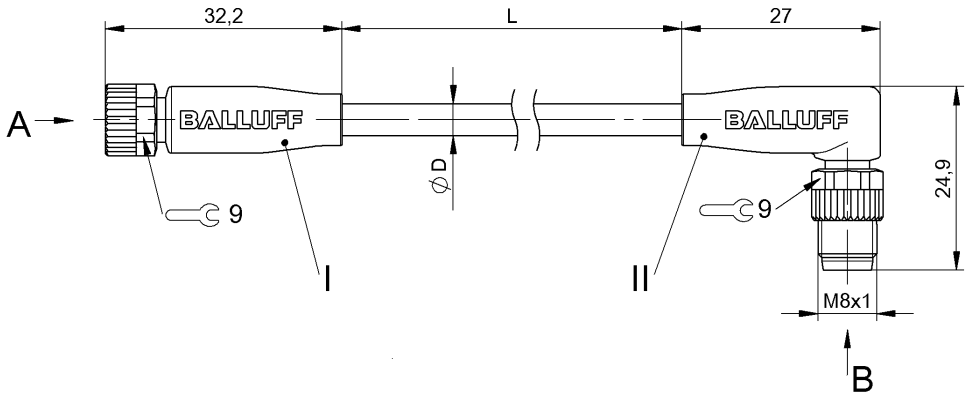

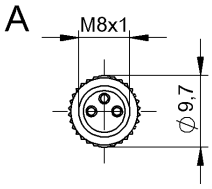

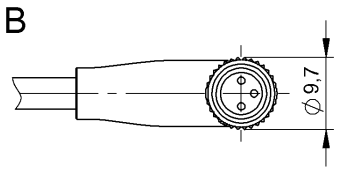

Basic features

Approval/Conformity	CE cULus EAC WEEE

Electrical connection

Bending radius min., fixed cable	5 x D
Bending radius min., flexible cable	10 x D
Cable	PUR black, 1 m, drag chain compatible
Cable diameter D	4.30 mm ±0.20 mm
Cable, bending cycles min.	5 mil.
Cable, torsion stress	±180°/m
Conductor cross-section	0.34 mm²
Connection 1	M8x1-Female, Straight, 3-pin, A-coded
Connection 2	M8x1-Male, angled, 3-pin, A-coded
Number of conductors	3
System	Molded/Molded

Electrical data

Operating voltage Ub	60 VDC / 60 VAC
Rated current (40 °C)	4.0 A

Environmental conditions

Cable temperature UL max., fixed routing	80 °C
Cable temperature UL max., flexible routing	80 °C
Cable temperature, drag chain	-25...60 °C
Cable temperature, fixed routing	-50...90 °C
Cable temperature, flexible routing	-25...90 °C
IP rating	IP67, IP69K/IP67, IP69K

Material

Cable jacket, material	PUR
Material contact carrier	PUR/PUR
Material contacts	Bronze/Brass
Material cover nut	Die-cast zinc or nickel plated brass/Die-cast zinc or nickel plated brass
Material grip	PUR/PUR

Mechanical data

Acceleration max., drag chain	5 m/s²
Cable jacket, color	black
Cable length L	1.00 m
Cable properties	drag chain compatible
Horizontal travel permitted, drag chain	5 m
Tightening torque pigtail	0.4 Nm/0.4 Nm
Traverse speed max., drag chain	200 m/min
Vertical travel permitted, drag chain	5 m

BCC M313-M323-30-300-PX0334-010
Order Code: BCC02RH

Remarks

Cable construction acc. to UL-AWM Style 20549
Halogen-free per DIN VDE 0472 Part 815
Silicone-free
Flame resistance acc. to IEC 60332-2
Enclosure rating per IEC 60529 or 20653, only in screwed state with the associated mating piece.

Connector Drawings



II	I
PIN 1: brown	PIN 1: brown
PIN 3: blue	PIN 3: blue
PIN 4: black	PIN 4: black

Wiring Diagrams

