21100-001 CAGE NUT KIT, M4, 50 PCS

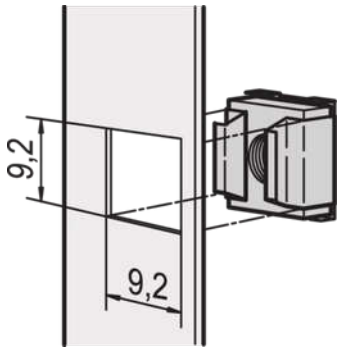

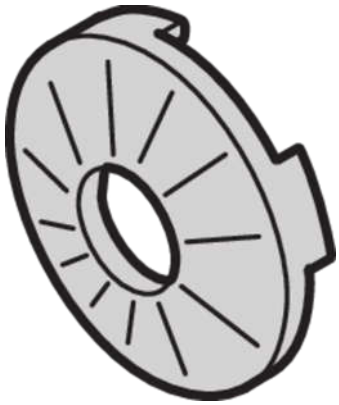

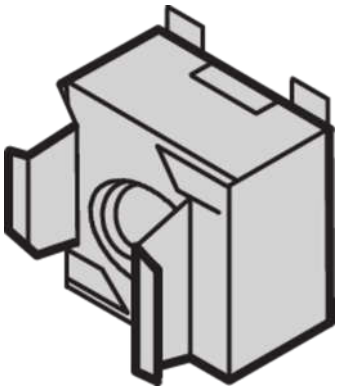

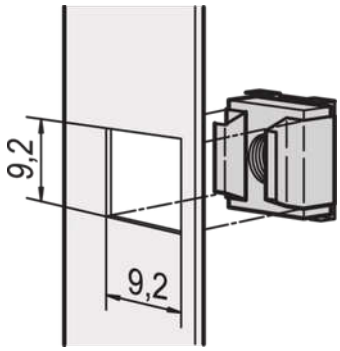

KEY FEATURES

For assembly of parts which require a thread size of M4 or M5

For standard grounding use a grounding nut and washer on at least one attachment point

PRODUCT ATTRIBUTES

Product Type: Nut

Type: Cage Nut

Works With: Front Panels; Eurorack; Novastar; Varistar; Varistar CP

Material: Steel

Finish: Zinc Plated

Thread Size: M4

ADDITIONAL PRODUCT DETAILS

Cage nuts permit range of choice of nut and bolts sizes and easily replaced unlike pre-threaded holes. Cage nuts are easy to use on materials too thin or soft to be threaded.

CERTIFICATIONS

RoHS COMPLIANT

North America
All locations
+1.763.422.2661
Chat with us:
schroff.nvent.com

Europe
Straubenhardt, Germany
+49.7082.794.0
Betschdorf, France
+33.3.88.90.64.90
Warsaw, Poland
+48.22.209.98.35
Assago, Italy
+39.02.932.7141
Chat with us:
schroff.nvent.com

Asia
Shanghai, China
+86.21.2412.6943
Qingdao, China
+86.532.8771.6101
Singapore
+65.6768.5800
Shin-Yokohama, Japan
+81.45.476.0271
Chat with us:
schroff.nvent.com

Middle East & India
Dubai, United Arab Emirates
+971.4.378.1700
Bangalore, India
+91.80.6715.2001
Istanbul, Turkey
+90.216.250.7374
Chat with us:
schroff.nvent.com

nVent

Our powerful portfolio of brands:
nVent.com CADDY ERICO HOFFMAN RAYCHEM SCHROFF TRACER

© 2024 nVent. All nVent marks and logos are owned or licensed by nVent Services GmbH or its affiliates. All other trademarks are the property of their respective owners.

nVent reserves the right to change specifications without notice.