# EVT564

## Connection cable

VDOAH040VAS3,75E04STAH040VAS

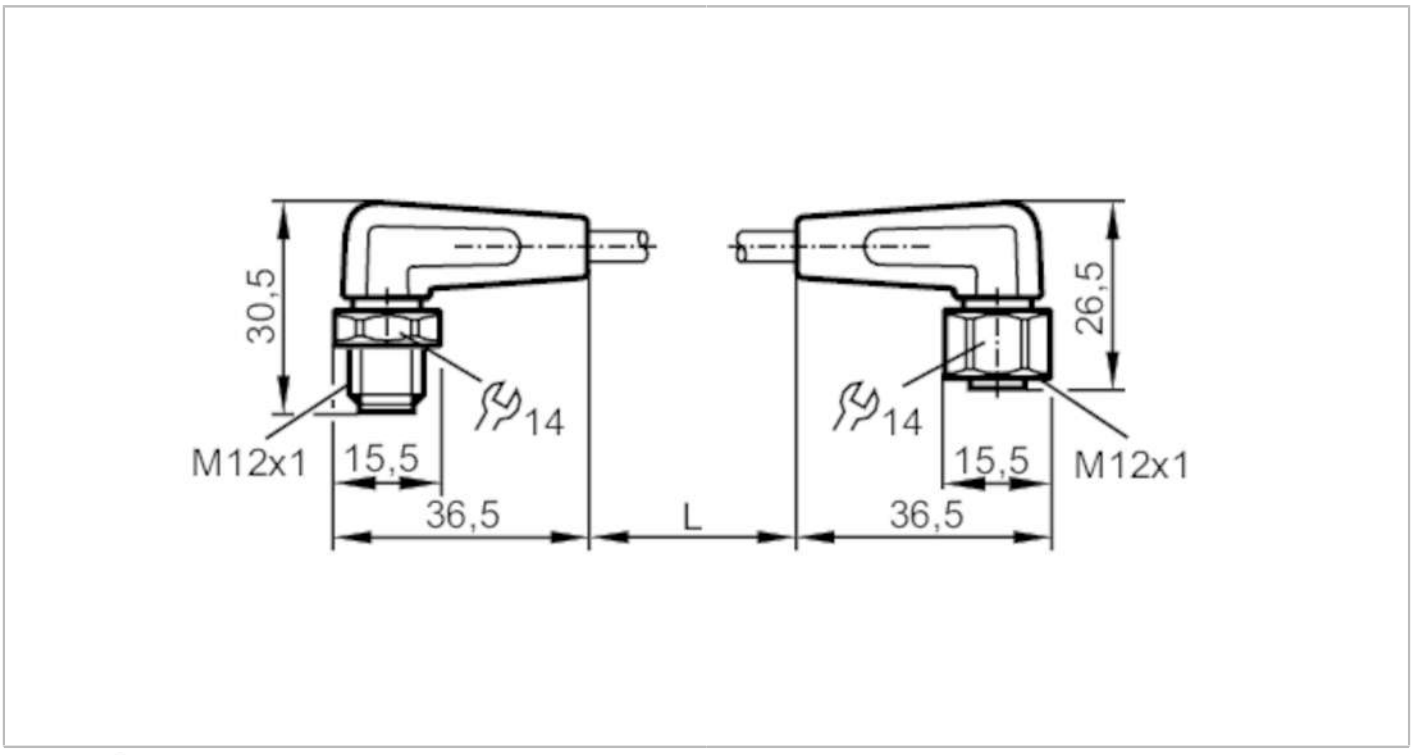


| | | |
|---|---|---|
| **Application** | | |
| Special feature | | Free from silicone; Gold-plated contacts; Drag chain suitability |
| Application | | hygienic and wet areas in the food industry |
| Free from silicone | | yes |
| **Electrical data** | | |
| Operating voltage | [V] | < 250 AC / < 300 DC |
| Protection class | | II |
| Max. current load total | [A] | 4 |
| **Operating conditions** | | |
| Ambient temperature | [°C] | -25...100 |
| Note on ambient temperature | | cULus: ...50 °C |
| Ambient temperature (moving) | [°C] | 5...100 |
| Note on ambient temperature (moving) | | cULus: ...50 °C |
| Storage temperature | [°C] | -25...55 |
| Storage humidity | [%] | 10...100 |
| Other climatic conditions for storage according to stated class | | 1K22/ DIN 60721-3-1 |
| Protection | | IP 65; IP 67; IP 68; IP 69K |
| **Mechanical data** | | |
| Weight | [g] | 171 |
| Dimensions | [mm] | 30.5 x 15.5 x 36.5 |
| Materials | | housing: PVC orange; Sealing: EPDM |

# EVT564

## Connection cable

VDOAH040VAS3,75E04STAH040VAS

| | | |
|---|---|---|
| Material nut | stainless steel (1.4404 / 316L) | |
| Drag chain suitability | yes | |
| Drag chain suitability | bending radius for flexible use | min. 10 x cable diameter |
| | travel speed | max. 3.3 m/s for a horizontal travel length of 5 m and max. acceleration of 5 m/s² |
| | bending cycles | > 1 Mio. |
| | torsional strain | ± 180 °/m |

### Remarks

| | |
|---|---|
| Pack quantity | 1 pcs. |

### Electrical connection - plug

Connector: 1 x M12, angled; coding: A; Locking: stainless steel (1.4404 / 316L); Contacts: gold-plated; Tightening torque: 0.6...1.5 Nm




### Electrical connection

Cable: 3.75 m, PVC, orange, Ø 4.9 mm; 4 x 0.34 mm² (42 x Ø 0.1 mm )

Connection

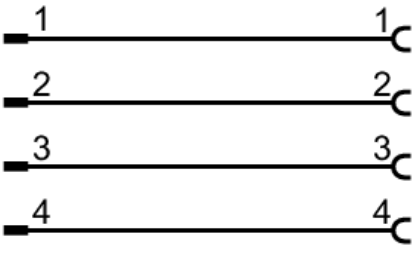


### Electrical connection - socket

Connector: 1 x M12, angled; coding: A; Locking: stainless steel (1.4404 / 316L); Contacts: gold-plated; Tightening torque: 0.6...1.5 Nm

