Brand of NTN corporation

# Technical data



## 6305FT150

Single row deep groove ball bearings

TOPLINE deep groove ball bearing, radial contact, pressed steel cage, contact seals on both sides, applications up to 150°C.

TOPLINE

## VISUAL (S)

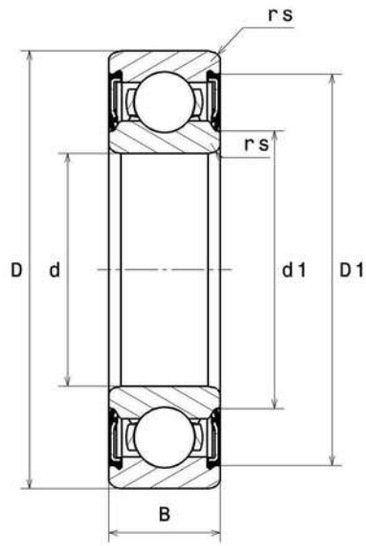

# 6305FT150
Single row deep groove ball bearings

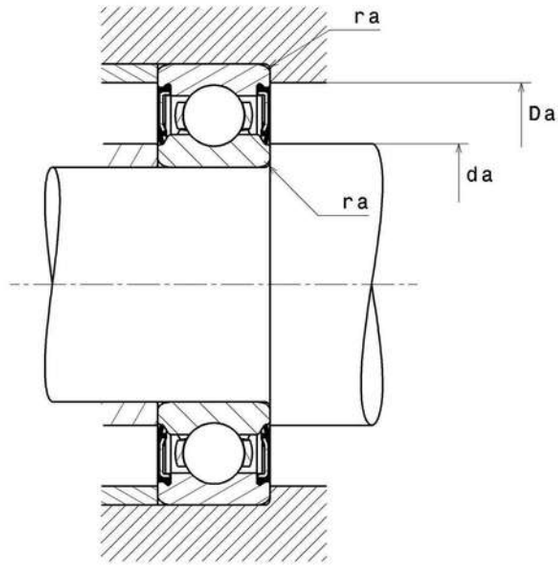


| PRODUCT DEFINITION | |
|---|---|
| **Brand** | SNR |
| **d - Internal diameter** | 25 mm |
| **D - External diameter** | 62 mm |
| **B - Bearing/Inner ring width** | 17 mm |
| **d1 - External diameter inner ring** | 33,6 mm |
| **D1 - Inner diameter outer ring** | 52,6 mm |
| **rs - Min fillet radius** | 1,1 mm |
| **Radial clearance class** | C3 |
| **Mass** | 0,225 kg |

| PRODUCT PERFORMANCE | |
|---|---|
| **C - Dynamic load** | 24900000 mN |
| **C0 - Static load** | 12100000 mN |
| **Cu - Fatigue limit load** | 550000 mN |

# 6305FT150
Single row deep groove ball bearings

| PRODUCT PERFORMANCE | |
|---|---|
| **f0 - Coefficient** | 12.2 |
| **N lim - Mechanical Limit Speed** | 49200 °/s |
| **Tmin - Min operating temperature** | 243,15 °K |
| **Tmax - Max operating temperature** | 423,15 °K |

| BEARING FREQUENCIES | |
|---|---|
| **BPFO - Over rolling frequency on outer ring (60 rpm)** | 2.542 Hz |
| **BPFI - Over rolling frequency on inner (60 rpm)** | 4.458 Hz |
| **BSF - Over rolling frequency on rolling element (60 rpm)** | 3.38 Hz |
| **BRF - Rotational frequency – rolling element (60 rpm)** | 1.69 Hz |
| **FTF - Rotational frequency - cage (60 rpm)** | 0.363 Hz |

| ABUTMENT | |
|---|---|
| **da min - Min shoulder diameter IR** | 31,5 mm |
| **da max - Max shoulder diameter IR** | 37,9 mm |
| **Da max - Max shoulder diameter OR** | 55,5 mm |
| **ra max - Max shaft & housing fillet radius** | 1 mm |

## INDUSTRY CALCUL FACTORS

**Equivalent dynamic radial load**

P = X.Fr + Y.Fa

| $\frac{f_0 F_a}{C_0}$ | e | Fa / Fr ≤ e | | Fa / Fr > e | |
|---|---|---|---|---|---|
| | | X | Y | X | Y |
| 0.172 | 0.19 | 1 | 0 | 0.56 | 2.3 |
| 0.345 | 0.22 | | | | 1.99 |
| 0.689 | 0.26 | | | | 1.71 |
| 1.03 | 0.28 | | | | 1.55 |
| 1.38 | 0.3 | | | | 1.45 |
| 2.07 | 0.34 | | | | 1.31 |
| 3.45 | 0.38 | | | | 1.15 |
| 5.17 | 0.42 | | | | 1.04 |
| 6.89 | 0.44 | | | | 1 |

**Equivalent static radial load**

Po = Xo.Fr + Yo.Fa

| $X_0$ | $Y_0$ |
|---|---|
| 0.6 | 0.5 |

For single or DT bearing arrangement :

If Po <Fr, then use Po = Fr