Brand of NTN corporation

Technical data

EXFCE214

Bearing units



Grey cast housing, radial insert ball bearing with eccentric locking collar, seal with slinger

KIT CONTENT

EX214G2, FCE214

VISUAL (S)

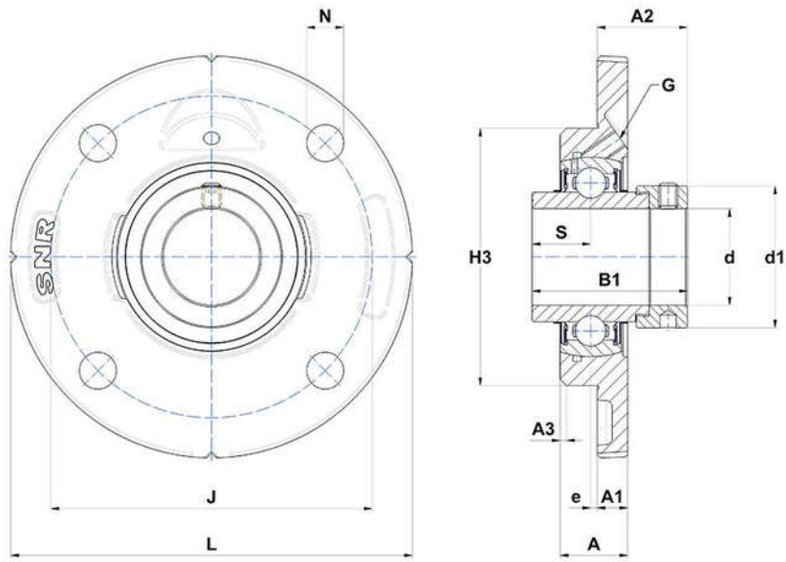

PRODUCT DEFINITION

Brand	SNR
A - Housing height	33 mm
A1 - Housing foot height / flange height	18 mm
A2 - Total height from mounting surface	51,6 mm
A3 - Centering depth / chamfer dimension	6 mm
B - Width of Inner Ring	68,2 mm

EXFCE214
Bearing units

PRODUCT DEFINITION	
B1 - Overall width Inner Ring	85,7 mm
d - Shaft diameter	70 mm
d1 - Outer dia of eccent. Lock. collar / nut of adapter sleeve	96,8 mm
G - Grease fitting	R1/8"
H3 - Centering dia	150 mm
J - Mounting holes distance	177 mm
L - Housing width / diameter	215 mm
N - Mounting hole dimension	18 mm
S - Distance front side/bearing centre	34,1 mm

PRODUCT PERFORMANCE	
C - Dynamic load rating	62000000 mN
C0 - Static load rating	45000000 mN
Operating temperature min.	253,15 °K
Operating temperature max.	373,15 °K

OTHER FEATURES	
Mass	5,58 kg
Recommended tightening torque for set screw	22 N-m