Info card

efector100®
Inductive sensors

ifm electronic

Correction factors

Values → data sheet

Exception K1 units:
Constant sensing range on all metals

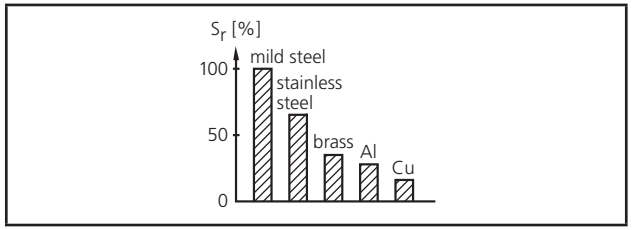

Configuration of cables and connectors

Colours: BK: black, BN: brown, BU: blue, WH: white

Standard configuration for 3-wire DC:

	Cable	Terminal chamber	US-100-plug
L+	BN	1 / 3	pin 1 / BN
L–	BU	2 / 4	pin 3 / BU
Output	BK	X	pin 2 / WH pin 4 / BK

2-wire quadronorm units:

	Cable	Terminal chamber	US-100-plug
	WH	—	1 / 4
	BK	—	1 / 4

Pin configuration of the US-100 connectors (view onto the plug at the unit)

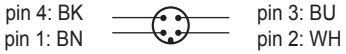

For the cable and the pin configuration as well as the unit data of special versions please refer to the wiring diagrams in our main position sensors catalogue or on our website.

This info card is to be regarded as a supplement to the main position sensors catalogue and to the individual data sheets. For further information and contact addresses please visit our homepage at **www.ifm.com**.

1 D 2226 / 03 07 / 2011

Important terms

Active Zone / Active face	Area over the sensing face in which the sensor reacts to the approach of the target.
Output function	Normally open: Object within the active zone – output switched. Normally closed: Object within the active zone – output blocked. Programmable: Choice between normally closed or normally open. Positive switching: Positive output signal (to L–). Negative switching: Negative output signal (to L+).
Power-on delay time	The time the sensor needs to be ready for operation after application of the operating voltage (in the millisecond range).
Hysteresis	The difference between the switch-on and the switch-off point.
Leakage current	Current for the internal supply of 2-wire units, also flows through the load when the output is unswitched.
Current consumption	Current for the internal supply of 3-wire DC units.
Switch point drift	The shifting of the switch point owing to changes in the ambient temperature.
Short circuit protection	ifm sensors which are protected against excessive current by means of a pulsed short-circuit protection. The inrush current of incandescent lamps, electronic relays and low resistance loads may cause this protection to cut in and turn the switch off!
Operating voltage	The voltage range in which the sensor functions safely. A stabilised and smoothed direct voltage should be used! Take into account residual ripple!
Switching frequency	Damping with standard target (mild steel) at half nominal sensing range. The damped – undamped ratio is 1 : 2.

Sensing range

Nominal sensing range s_n:
design range of the unit

Real sensing range s_r:
individual deviations at room temperature between 90 % and 110 % of s_n

Useful sensing range s_u:
switch point drift
between 90 % and 110 % of s_r

Operating distance s_a:
safe switching
between 0 and 81 % of s_n

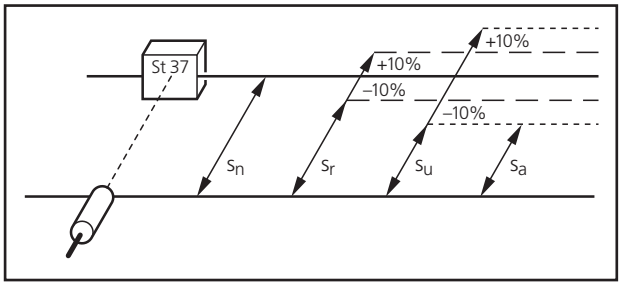

UK

Info card

efector100
Inductive sensors

ifm electronic

Tips on flush and non-flush mounting in metal

Mounting instructions cylindrical designs

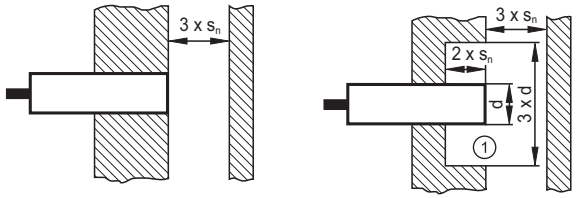

flush | non flush

Mounting instructions rectangular designs

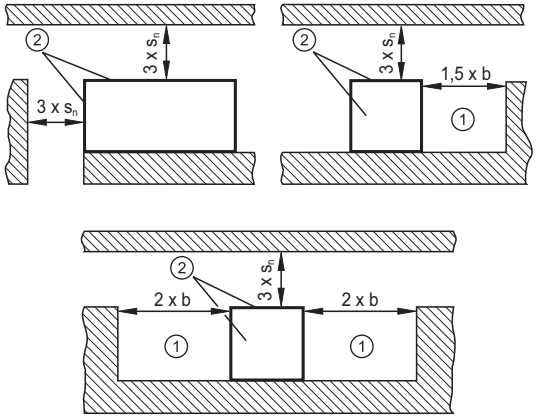

When mounting units of the same type, certain minimum distances have to be adhered to if the units are mounted opposite each other or in parallel.

Applies to cylindrical and rectangular sensors

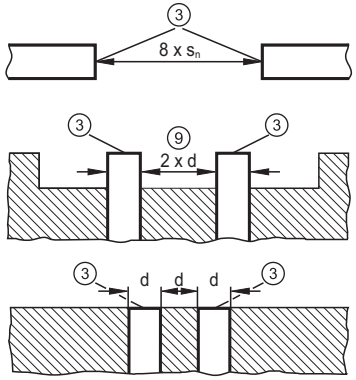

If non-flush mountable units are mounted flush the device will be permanently switched!

Connection systems

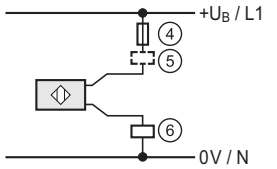

2-wire technology
(negative **or** positive switching)

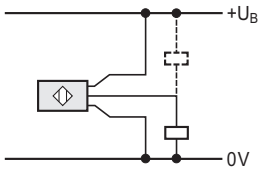

3-wire technology
(negative **or** positive switching)

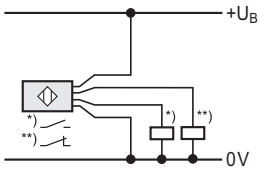

4-wire technology
(positive switching, normally closed and normally open)

UK

Series connection

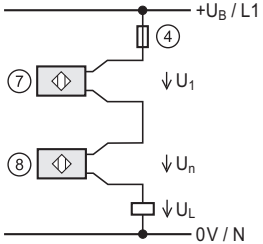

Series connection of 2-wire units
Not recommended, as output undefined in undamped state. Use special types which can be connected in series (max. 2 units). Voltage drops add up.

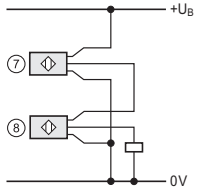

Series connection of 3-wire units
Max. 4 units. Power-on delay times, voltage drops and current consumptions add up. $U_{B\ min}$ (sensor) and $U_{HIGH\ min}$ (load) must remain stable.

Parallel connection

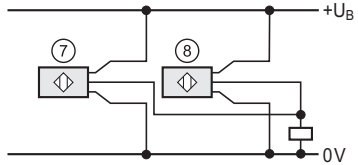

Parallel connection 2-wire units
Not possible.

Parallel connection 3-wire units
The current consumption of all non-switched units adds up. The units can be used in combination with mechanical switches.

1. Clear space
2. Active zone
3. Sensing face
4. Miniature fuse according to the technical data sheet, if specified. Recommendation: check the unit for reliable function after a short cirucit.
5. Negative switching
6. Positive switching
7. Sensor 1
8. Sensor n
9. In individual cases deviating value → data sheet