Keysight U4205A Direct Connect 34-Channel Mictor Probe

KEYSIGHT

User Guide

Notices

© Keysight Technologies 2014, 2023

No part of this manual may be reproduced in any form or by any means (including electronic storage and retrieval or translation into a foreign language) without prior agreement and written consent from Keysight Technologies as governed by United States and international copyright laws.

Manual Part Number

U4205-97000

Edition

Third Edition, May 2023

Keysight Technologies
1900 Garden of the Gods Road
Colorado Springs, CO 80907 USA

Warranty

THE MATERIAL CONTAINED IN THIS DOCUMENT IS PROVIDED "AS IS," AND IS SUBJECT TO BEING CHANGED, WITHOUT NOTICE, IN FUTURE EDITIONS. FURTHER, TO THE MAXIMUM EXTENT PERMITTED BY APPLICABLE LAW, KEYSIGHT DISCLAIMS ALL WARRANTIES, EITHER EXPRESS OR IMPLIED WITH REGARD TO THIS MANUAL AND ANY INFORMATION CONTAINED HEREIN, INCLUDING BUT NOT LIMITED TO THE IMPLIED WARRANTIES OF MERCHANTABILITY AND FITNESS FOR A PARTICULAR PURPOSE. KEYSIGHT SHALL NOT BE LIABLE FOR ERRORS OR FOR INCIDENTAL OR CONSEQUENTIAL DAMAGES IN CONNECTION WITH THE FURNISHING, USE, OR PERFORMANCE OF THIS DOCUMENT OR ANY INFORMATION CONTAINED HEREIN. SHOULD KEYSIGHT AND THE USER HAVE A SEPARATE WRITTEN AGREEMENT WITH WARRANTY TERMS COVERING THE MATERIAL IN THIS DOCUMENT THAT CONFLICT WITH THESE TERMS, THE WARRANTY TERMS IN THE SEPARATE AGREEMENT WILL CONTROL.

Technology Licenses

The hardware and/or software described in this document are furnished under a license and may be used or copied only in accordance with the terms of such license.

Restricted Rights Legend

If software is for use in the performance of a U.S. Government prime contract or subcontract, Software is delivered and licensed as "Commercial computer software" as defined in DFAR 252.227-7014 (June 1995), or as a "commercial item" as defined in FAR 2.101(a) or as "Restricted computer software" as defined in FAR 52.227-19 (June 1987) or any equivalent agency regulation or contract clause. Use, duplication or disclosure of Software is subject to Keysight Technologies standard commercial license terms, and non-DOD Departments and Agencies of the U.S. Government will receive no greater than Restricted Rights as defined in FAR 52.227-19(c)(1-2) (June 1987). U.S. Government users will receive no greater than Limited Rights as defined in FAR 52.227-14 (June 1987) or DFAR 252.227-7015 (b)(2) (November 1995), as applicable in any technical data.

Safety Notices

CAUTION

A CAUTION notice denotes a hazard. It calls attention to an operating procedure, practice, or the like that, if not correctly performed or adhered to, could result in damage to the product or loss of important data. Do not proceed beyond a CAUTION notice until the indicated conditions are fully understood and met.

WARNING

A WARNING notice denotes a hazard. It calls attention to an operating procedure, practice, or the like that, if not correctly performed or adhered to, could result in personal injury or death. Do not proceed beyond a WARNING notice until the indicated conditions are fully understood and met.

Contents

1 U4205A Overview

U4205A - At a Glance 6

The U4205A 34-channel 38-pin Single-ended Mictor Probe: 6

Introduction to U4205A Use 7

Descriptions of U4205A Direct Connect Probe 7

Number of Probes Required 7

Maximum State Speed Supported 7

The U4205A 34-Channel 38-pin Single-Ended Mictor Probe 8

2 Mechanical Considerations

Characteristics 10

Probe Dimensions 11

MICTOR Connector Dimensions 12

Support Shroud Dimensions 13

Footprint Dimensions 14

U4205A 38-pin Single-ended Probe Pinout Table 15

3 Operating U4205A Probe

Equivalent Probe Load 18

Measured Versus Modeled Input Impedance 19

4 Circuit Board Design

Transmission Line Considerations 22

16850 Series and U4154A Data and Clock Inputs per Operating Mode 23

Thresholds 24

U4205A Direct-Connect 34-Channel 38-pin Single-Ended Mictor Probe 24

Signal Access 25

Labels Split Across Probes 25
Re-ordered Bits 25

5 Recommended Reading

For More Information 28

MECL System Design Handbook 28
High-speed Digital Design 28
Designing High-speed Target Systems for Logic Analyzer Probing 28

6 Connectors and Shrouds

Ordering Probing Connectors and Shrouds 30

7 Safety Information

Safety Symbols 32

Informations relatives à la sécurité 34

Symboles de sécurité: 35

Keysight U4205A Direct Connect 34-Channel Mictor Probe

User Guide

1 U4205A Overview

U4205A - At a Glance / 6
Introduction to U4205A Use / 7
The U4205A 34-Channel 38-pin Single-Ended Mictor Probe / 8

This chapter describes features and specifications of U4205A 34-channel single-ended Mictor probe.

KEYSIGHT TECHNOLOGIES

U4205A - At a Glance

The U4205A is a 34-channel single-ended Mictor probe which is compatible with the 160-pin interface on logic analyzers including the Keysight 16850-series portable logic analyzers and U4154A logic analysis AXIe-based modules. For more information on Keysight logic analyzers, refer to http://www.keysight.com/find/logicanalyzer. For more information on your specific analyzer, refer to the Online help.

The U4205A 34-channel 38-pin Single-ended Mictor Probe:

- Compatible with the 16850 Series and U4154A
- Compatible with boards designed for Keysight E5346A 38-pin probe
- 34 Channels
- State speeds up to 600 Mb/s
- 300 mV peak-to-peak sensitivity
- 38-pin MICTOR connector
- Requires AMP MICTOR 38 connector and Keysight support shroud

see page 30

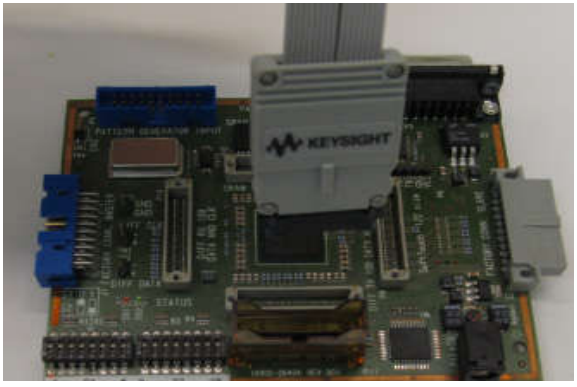

Figure 1 E5386A half channel adapter

Introduction to U4205A Use

This chapter provides information to help you utilize the U4205A. Tables in this chapter show you the number of probes required and the maximum state speed supported depending on which logic analyzer you have. Another table shows the number of data and clock inputs for the various operating modes of your logic analyzer.

Descriptions of U4205A Direct Connect Probe

- U4205A Direct Connect 34-Channel 38-pin single-ended probe

Number of Probes Required

This table shows how many probes are required to provide connections to all channels of your logic analyzer module.

Table 1 Number of probes required

Probe	Logic Analyzer Module				
	U4154A	16851A	16852A	16853A	16854A
U4205A 38-pin single-ended probe	4	1	2	3	4

Maximum State Speed Supported

This table gives you the maximum state speed that is supported by the combination of a probe and your logic analyzer module.

Table 2 Maximum state speed supported

Probe	Logic Analyzer Module				
	U4154A	16851A	16852A	16853A	16854A
U4205A 38-pin single-ended probe	600 Mb/s	600 Mb/s			

The U4205A 34-Channel 38-pin Single-Ended Mictor Probe

The U4205A is a direct connect, 34- channel, single- ended, 38- pin probe designed to be compatible with the AMP MICTOR 38- pin connector. It is pin- compatible with target systems that were designed for the Keysight E5346A 38- pin probe, thus enabling you to use Keysight's latest logic analyzers with target systems that were designed for older Keysight logic analyzers. The U4205A is compatible with the Keysight 16851A, 16852A,16853A and 16854A portable logic analyzers, and the U4154A logic analyzer module. It is capable of capturing state (synchronous) data at clock speeds up to 600 MHz, at data rates up to 600 Mb/s, with signal amplitudes as small as 300 mV peak- to- peak.

The Keysight E5346- 68701 or E5346- 68700 probing connector kit is required for connecting the U4205A probe to your target system. The kit contains five mating connectors and five support shrouds. The connectors and shrouds may be ordered separately if desired. See the table on page 30 for part numbers.



Figure 2 U4205A 38-pin single-ended probe

See Also: Chapter 2 for the mechanical information to design the connector into your target system boards.

2 Mechanical Considerations

Characteristics / 10
Probe Dimensions / 11
MICTOR Connector Dimensions / 12
Support Shroud Dimensions / 13
Footprint Dimensions / 14
U4205A 38-pin Single-ended Probe Pinout Table / 15

This chapter describes mechanical considerations and dimensions of U4205A 34-channel single-ended Mictor probe.

Characteristics

Electrical considerations such as equivalent probe loads, input impedance, and time domain transmission are shown in chapters 3 and 4 of this manual. Other characteristics are dependent on the logic analyzer module you are using.

Probe Dimensions

The following figure shows the dimensions of the 38-pin single-ended probe.

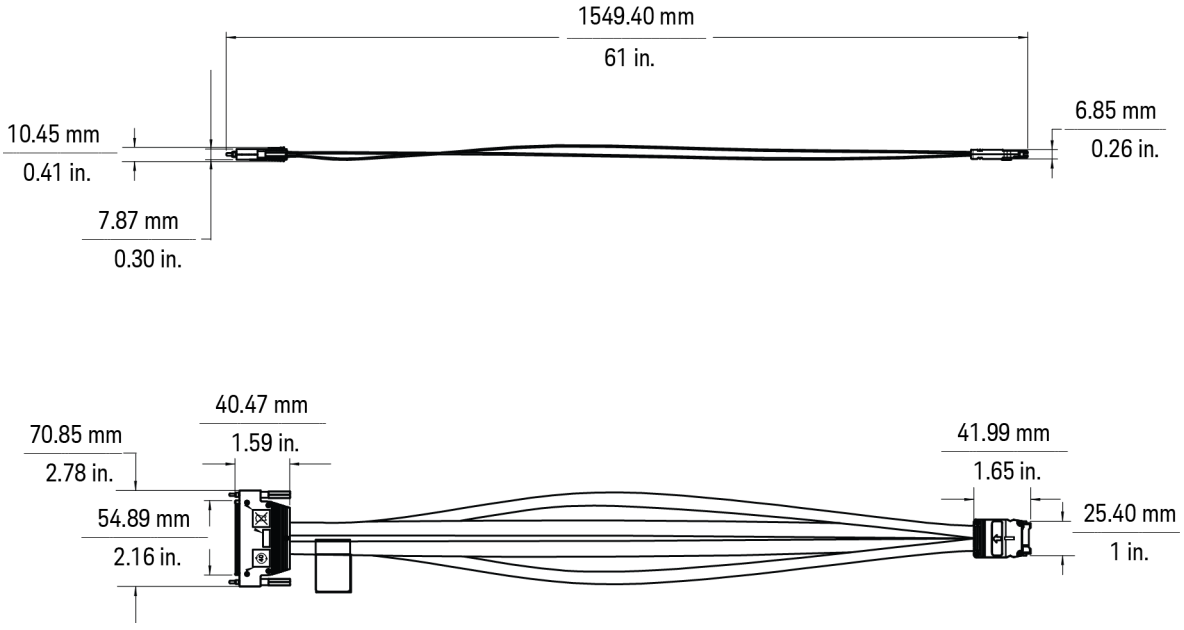

Figure 3 U4205A 38-pin single-ended probe dimensions

MICTOR Connector Dimensions

The U4205A probe is compatible with target systems designed for the Keysight E5346A 38-pin probe. This probe requires a probe kit that contains MICTOR connectors and shrouds. Refer to page 30 for the kit part numbers.

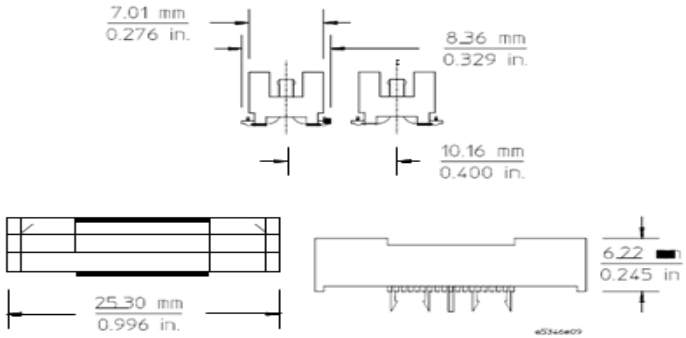

Figure 4 MICTOR 38-pin connector dimensions

Support Shroud Dimensions

Support shrouds are not required but are recommended if pulling forces may be applied to the cables that could cause the connector to be dislodged. Refer to page 30 for the kit part numbers.

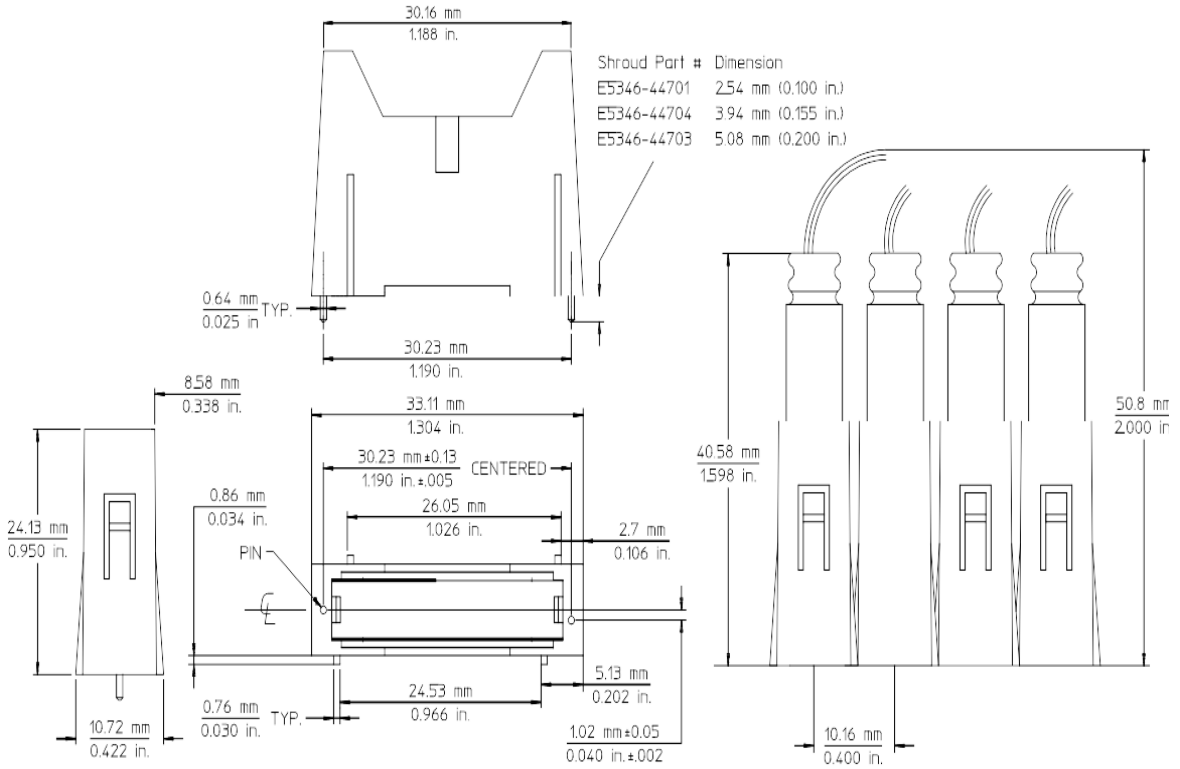

Figure 5 Support shroud dimensions for the MICTOR 38-pin connector

Footprint Dimensions

Use the following 38-pin MICTOR connector footprint and support shroud mounting hole dimensions to design your target system board.

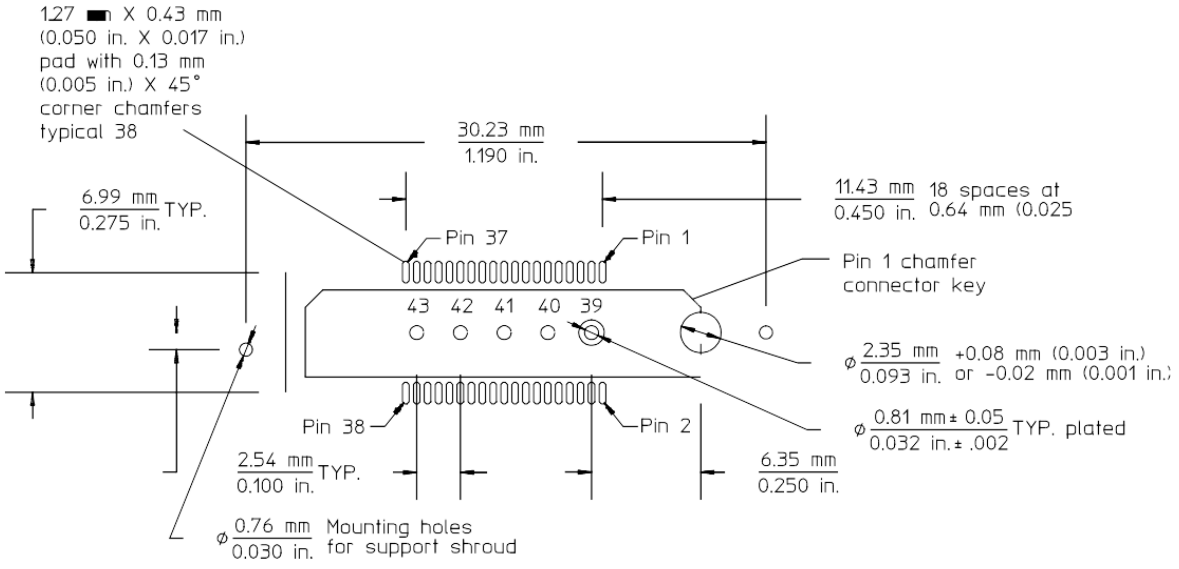

Figure 6 38-pin MICTOR connector footprint and support shroud mounting hole dimensions

U4205A 38-pin Single-ended Probe Pinout Table

The following table lists the signal, Mictor pin number and the channel values of the U4205A 38-pin single-ended probe.

Table 3 U4205A 38-pin single-ended probe pinout table

U4205A Single-ended Probe		Logic Analyzer	
Signal Name	Mictor Pin	Channel	Pod
Clk	5	Clk	Which ever pod is connected to **"Even"** on the U4205A probe
D 15	7	15	
D 14	9	14	
D 13	11	13	
D 12	13	12	
D 11	15	11	
D 10	17	10	
D 9	19	9	
D 8	21	8	
D 7	23	7	
D 6	25	6	
D 5	27	5	
D 4	29	4	
D 3	31	3	
D 2	33	2	
D 1	35	1	
D 0	37	0	
Ground	39-43		

U4205A Single-ended Probe		Logic Analyzer	
Signal Name	Mictor Pin	Channel	Pod
Clk	6	Clk	Whichever pod is connected to **"Odd"** on the U4205A probe
D 15	8	15	
D 14	10	14	
D 13	12	13	
D 12	14	12	
D 11	16	11	
D 10	18	10	
D 9	20	9	
D 8	22	8	
D 7	24	7	
D 6	26	6	
D 5	28	5	
D 4	30	4	
D 3	32	3	
D 2	34	2	
D 1	36	1	
D 0	38	0	
Ground	39-43		

NOTE

Do not connect the following pins. These pins are +5 volt supply and DC return for analysis probes.

+5 V dc 1
Ground 3

Do not connect the following pins. They are used by the Keysight logic analyzer with an emulator or analysis probe to program or read target information.

SCL 2

SDA 4

3 Operating U4205A Probe

Equivalent Probe Load / 18

This chapter describes load specifications for operating U4205A 34-channel single-ended Mictor probe.

Equivalent Probe Load

The equivalent probe load for the U4205A probe is shown in the figure below. It includes the 38- pin MICTOR connector and the target connector. The model is accurate up to 1 GHz.

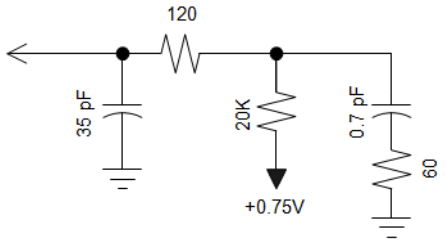

Figure 7 Equivalent load for U4205A

Measured Versus Modeled Input Impedance

The U4205A probes have an input impedance which varies with frequency, and depends on which accessories are being used. The following graph shows the input impedance of the probe.

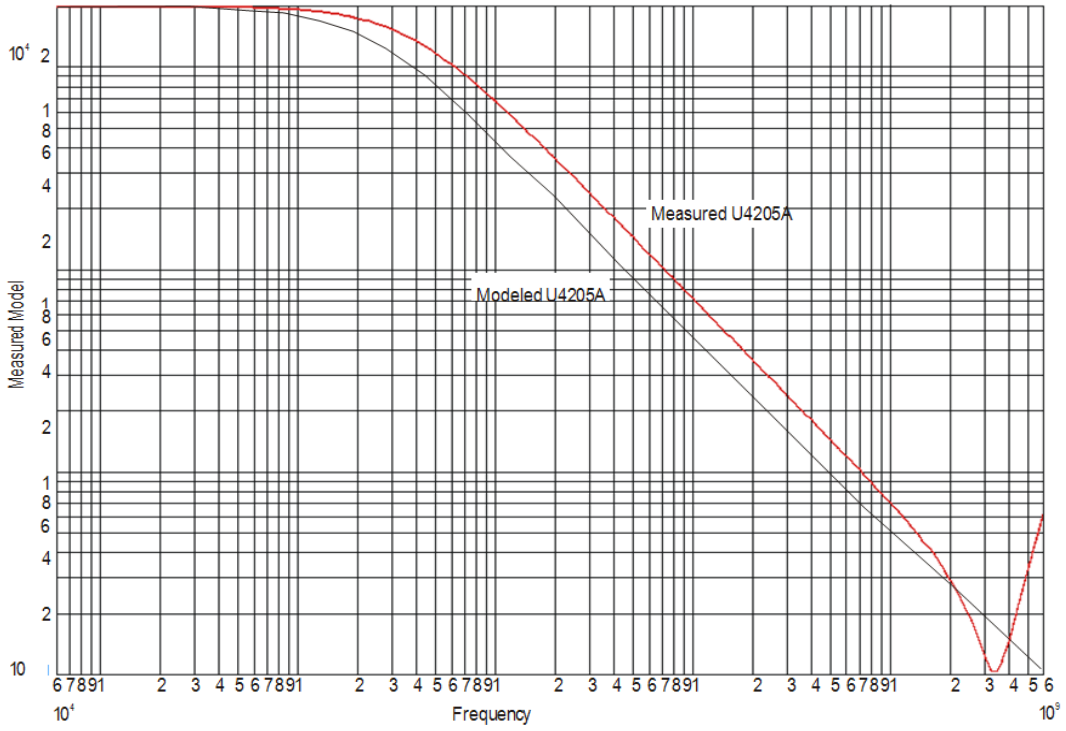

Figure 8 Measured versus modeled input impedance

4 Circuit Board Design

Transmission Line Considerations / 22
16850 Series and U4154A Data and Clock Inputs per Operating Mode / 23
Thresholds / 24
Signal Access / 25

This chapter describes design considerations for circuit board layout for U4205A 34-channel single-ended Mictor probe.

Transmission Line Considerations

Stubs connecting signal transmission lines to the connector should be as short as feasible. Longer stubs will cause more loading and reflections on a transmission line. If the electrical length of a stub is less than 1/5 of the signal rise time, it can be modeled as a lumped capacitance. Longer stubs must be treated as transmission lines.

Example

Assume you are using FR-4 PC board material with a dielectric constant of ~4.3 for inner-layer traces (microstrip). For example, A 0.28 cm long stub in an inner layer has a propagation delay of ~20 ps. Therefore, for a signal with a rise time of 100 ps or greater, a 0.28 cm stub will behave like a capacitor.

The trace capacitance per unit length will depend on the trace width and the spacing to ground or power planes. If the trace is laid out to have a characteristic impedance of 50 ohms, it turns out that the capacitance per unit length is ~ 1.2 pF/cm. Therefore, the 0.28 cm stub in the previous example would have an effective capacitance equal to ~0.34 pF.

This trace capacitance is in addition to the probe load model.

16850 Series and U4154A Data and Clock Inputs per Operating Mode

The following table shows the number of data and clock inputs for each connector on your target system for the various operating modes of your U4154A and 16850 Series logic analyzer.

Table 4 Data clock inputs per operating mode

U4154A and 16850 Series Operating Mode	U4205A
Synchronous (state) analysis maximum 800 Mb/s	32 data plus 2 clock inputs (see Note below)
Eye scan mode 800 Mb/s	32 data plus 2 clock inputs (see Note below)
Timing mode	32 data plus 2 clock inputs

NOTE In synchronous (state) analysis mode, and in the eye scan mode, there is one clock input which must be routed to the clock input on pod 1. The clock inputs on other pods can be assigned to labels and acquired as data inputs.

Thresholds

U4205A Direct-Connect 34-Channel 38-pin Single-Ended Mictor Probe

All inputs in the U4205A 38-pin probe are single-ended. The U4205A probe does not have a threshold reference input. When you use the U4205A, you adjust the logic threshold in the user interface.

The clock input on the U4205A is single-ended. The clock threshold may be adjusted independent of the data.

Signal Access

Labels Split Across Probes

If a label is split across more than one pod, this may lead to restrictions in triggering. Refer to "Triggering with the Keysight 16760A" (Keysight publication number 5988-2994EN) for more details. Triggering restrictions across more than one pod may or may not apply depending upon the actual configuration.

Re-ordered Bits

If bits need to be reordered within a label, this leads to additional restrictions in triggering. Specifically, equalities can be used to evaluate the value of a label with reordered bits, but inequalities cannot be used. You may be able to avoid the need to reorder bits in a label by routing signals to appropriate pins on the probe connector. Refer to “Triggering with the Keysight 16760A" (Keysight publication number 5988-2994EN) for more details.

5 Recommended Reading

For More Information / 28

This chapter lists the recommended reading for more information about systems and high-speed digital design.

For More Information

For more information on Keysight logic analyzers, refer to http://www.keysight.com/find/logicanalyzer.For more information on your specific analyzer, refer to the online help in the product.

MECL System Design Handbook

Blood, William R. Jr., "MECL System Design Handbook," 4th edition, 1988, published by Motorola. This handbook can be obtained from ON Semiconductor on the web. Go to

<http://onsemi.com>. Click on "On- line ordering" under "Documentation." Click on the link "General search." Type in "HB205" in the "Document number" field. Click "Submit." To view the document online, click on "PDF" in the right- hand column titled "PDF MFAX." Or order a hardcopy of the handbook on- line.

High-speed Digital Design

Johnson, Howard W., and Martin Graham, "High-speed Digital Design," Prentice-Hall, 1993, ISBN 0-13-395724-1

Designing High-speed Target Systems for Logic Analyzer Probing

“Designing High-speed Target Systems for Logic Analyzer Probing” Keysight Technologies application note publication number5988-2989EN.

6 Connectors and Shrouds

Ordering Probing Connectors and Shrouds / 30

This chapter lists the Keysight part numbers of the Probes and their corresponding Targets.

Ordering Probing Connectors and Shrouds

Connectors and shrouds may be ordered in kits or ordered separately. Select a support shroud appropriate for the thickness of your PC board. The following table lists the Keysight part numbers for each of these connectors and shrouds.

Table 5 Keysight part numbers

For Probes Model #	Keysight Part Number	Consists of	For Target PC Board Thickness
U4205A	E5346-68701	5 MICTOR Connectors & 5 Support Shrouds	up to 1.57 mm (0.062 in.)
	E5346-68700	5 MICTOR Connectors & 5 Support Shrouds	1.575 to 3.175 mm (0.062 to 0.125 in.)
	1252-7431	1 MICTOR Connector	n/a
	AMP part #2-767004-2	1 MICTOR Connector	n/a
	E5346-44701	1 Support Shroud	up to 1.57 mm (0.062”)
	E5346-44704	1 Support Shroud	1.575 to 3.175 mm (0.062 to 0.125 in.)
	E5346-44703	1 Support Shroud	3.175 to 4.318 mm (0.125 to 0.70 in.)

Safety Information

The following general safety precautions must be observed during all phases of operation of this instrument. Failure to comply with these precautions or with specific warnings or operating instructions in the product manuals violates safety standards of design, manufacture, and intended use of the instrument. Keysight Technologies assumes no liability for the customer's failure to comply with these requirements. Product manuals are provided with your instrument on CD-ROM and/or in printed form. Printed manuals are an option for many products. Manuals may also be available on the Web. Go to www.keysight.com and type in your product number in the Search field at the top of the page.

General

Do not use this product in any manner not specified by the manufacturer. The protective features of this product may be impaired if it is used in a manner not specified in the operation instructions.

Before Applying Power

Verify that all safety precautions are taken. Make all connections to the unit before applying power. Note the instrument's external markings described in “Safety Symbols”.

Ground the Instrument

If your product is provided with a grounding type power plug, the instrument chassis and cover must be connected to an electrical ground to minimize shock hazard. The ground pin must be firmly connected to an electrical ground (safety ground) terminal at the power outlet. Any interruption of the protective (grounding) conductor or disconnection of the protective earth terminal will cause a potential shock hazard that could result in personal injury.

Fuses

See the user's guide or operator's manual for information about line-fuse replacement. Some instruments contain an internal fuse, which is not user accessible.

Do Not Operate in an Explosive Atmosphere

Do not operate the instrument in the presence of flammable gases or fumes.

Do Not Remove the Instrument Cover

Only qualified, service-trained personnel who are aware of the hazards involved should remove instrument covers. Always disconnect the power cable and any external circuits before removing the instrument cover.

Cleaning

Clean the outside of the instrument with a soft, lint-free, slightly dampened cloth. Do not use detergent or chemical solvents.

Do Not Modify the Instrument

Do not install substitute parts or perform any unauthorized modification to the product. Return the product to Keysight Sales and Service Office for service and repair to ensure that safety features are maintained.

In Case of Damage

Instruments that appear damaged or defective should be made inoperative and secured against unintended operation until they can be repaired by qualified service personnel.

CAUTION

A CAUTION notice denotes a hazard. It calls attention to an operating procedure, practice, or the like that, if not correctly performed or adhered to, could result in damage to the product or loss of important data. Do not proceed beyond a CAUTION notice until the indicated conditions are fully understood and met.

WARNING **A WARNING notice denotes a hazard. It calls attention to an operating procedure, practice, or the like that, if not correctly performed or adhered to, could result in personal injury or death. Do not proceed beyond a WARNING notice until the indicated conditions are fully understood and met.**

Safety Symbols

Symbol	Description
	Direct current
	Alternating current
	Both direct and alternating current
	Three phase alternating current
	Earth ground terminal
	Protective earth ground terminal
	Frame or chassis ground terminal
	Terminal is at earth potential
	Equipotentiality
N	Neutral conductor on permanently installed equipment
L	Line conductor on permanently installed equipment
	On (mains supply)

Symbol	Description
	Off (mains supply)
	Standby (mains supply). The instrument is not completely disconnected from the mains supply when the power switch is in the standby position
	In position of a bi-stable push switch
	Out position of a bi-stable push switch
	Equipment protected throughout by DOUBLE INSULATION or REINFORCED INSULATION
	Caution, refer to accompanying documentation
	Caution, risk of electric shock
	Do not apply around or remove from HAZARDOUS LIVE conductors
	Application around and removal from HAZARDOUS LIVE conductors is permitted
	Caution, hot surface
	Ionizing radiation
CAT I	IEC Measurement Category I
CAT II	Measurement Category II
CAT III	Measurement Category III
CAT IV	Measurement Category IV

Informations relatives à la sécurité

Les consignes de sécurité générales présentées dans cette section doivent être appliquées au cours des différentes phases d'utilisation de cet appareil. Le non-respect de ces précautions ou des avertissements et consignes d'utilisation spécifiques mentionnés dans les manuels des produits constitue une violation des normes de sécurité relatives à la conception, à la fabrication et à l'usage normal de l'instrument. Keysight Technologies ne saurait être tenu responsable du non-respect de ces consignes. Les manuels des produits sont fournis avec votre instrument sur CD-ROM et/ou en version papier. Les versions papier des manuels sont en option pour de nombreux produits. Certains manuels sont également disponibles en ligne. Pour y accéder, allez sur le site www.keysight.com et saisissez la référence de votre produit dans le champ Rechercher qui se trouve en haut de la page.

Généralités

Utilisez ce produit uniquement dans le cadre prévu par le fabricant. Si vous ne respectez pas les instructions d'utilisation, les fonctions de sécurité du produit risquent d'être inhibées.

Avant la mise sous tension

Vérifiez que vous avez bien respecté toutes les consignes de sécurité. Faites tous les branchements au niveau de l'appareil avant de mettre ce dernier sous tension. Tenez compte des marquages externes à l'instrument décrits à la section «Symboles de sécurité».

Mise à la terre de l'instrument

Si une prise de mise à la terre est fournie avec le produit, le châssis et le capot de l'instrument doivent être reliés à la terre afin de limiter les risques d'électrocution. Le contact à la terre doit être solidement connecté à une borne de terre (de sécurité) au niveau de la prise de courant . Toute interruption du conducteur de protection (mise à la terre) ou tout débranchement de la borne de terre de protection donne lieu à un risque d'électrocution pouvant entraîner des blessures graves.

Fusibles

Pour obtenir des instructions sur le changement des fusibles de ligne, consultez le guide de l'utilisateur ou le manuel d'instructions. Certains instruments comportent un fusible interne inaccessible à l'utilisateur.

Ne pas utiliser en atmosphère explosive

N'utilisez pas l'instrument en présence de gaz ou de vapeurs inflammables.

Ne pas démonter le capot de l'instrument

Seules des personnes qualifiées, formées à la maintenance et conscientes des risques d'électrocution encourus sont autorisées à démonter les capots de l'instrument. Débranchez toujours le cordon d'alimentation secteur et tous les circuits externes avant de démonter le capot de l'instrument.

Nettoyage

Nettoyez la partie externe de l'instrument à l'aide d'un chiffon doux et non pelucheux, légèrement humidifié. N'utilisez pas de détergents ou de solvants chimiques.

Ne pas modifier l'instrument

N'installez pas de composants de remplacement et n'apportez aucune modification non autorisée à l'appareil. Pour toute opération de maintenance ou de réparation, renvoyez l'appareil à un bureau de vente et de service après-vente keysight, afin d'être certain que les fonctions de sécurité seront maintenues.

En cas de dommages

Les instruments endommagés ou défectueux doivent être désactivés et protégés contre toute utilisation involontaire jusqu'à ce qu'ils aient été réparés par une personne qualifiée.

ATTENTION La mention ATTENTION indique un risque. Si la manoeuvre ou le procédé correspondant n'est pas exécuté correctement, il peut y avoir un risque de dommages à l'appareil ou de perte de données importantes. En présence de la mention ATTENTION, il convient de s'interrompre tant que les conditions indiquées n'ont pas été parfaitement comprises et respectées.

AVERTISSEMENT **La mention AVERTISSEMENT signale un danger pour la sécurité de l'opérateur. Si la manœuvre ou le procédé correspondant n'est pas exécuté correctement, il peut y avoir un risque pour la santé des personnes. En présence d'une mention AVERTISSEMENT, il convient de s'interrompre tant que les conditions indiquées n'ont pas été parfaitement comprises et respectées.**

Symboles de sécurité:

Symboles	Description
	Courant continu.
	Courant alternatif.
	Courant continu et alternatif.
	Courant alternative triphasé.
	Borne de terre (masse).
	Borne de terre de protection.
	Borne de terre reliée au cadre ou au châssis.
	Borne au potentiel de la terre.
	Equipotentialité

Symboles	Description
N	Conducteur neutre sur un équipement installé à demeure
L	Conducteur de phase sur un équipement installé à demeure.
	Alimentation en marche.
	Alimentation à l'arrêt.
	Alimentation en mode veille. Lorsque l'interrupteur est en mode veille, l'unité n'est pas complètement déconnectée de l'alimentation secteur.
	Position Marche d'un interrupteur par bouton poussoir bi-stable.
	Position Arrêt d'un interrupteur par bouton poussoir bi-stable.
	Appareil entièrement protégé par DOUBLE ISOLATION ou ISOLATION RENFORCÉE
	Attention. Consultez la documentation fournie.
	Attention, danger d'électrocution.
	Ne pas appliquer ou enlever sur des conducteurs SOUS TENSION DANGEREUSE
	Application ou retrait autorisés sur les conducteurs SOUS TENSION DANGEREUSE
	Attention, surface chaude
	Rayonnement ionisant
CAT I	Appareil de mesure de catégorie I selon la norme CEI applicable

Symboles	Description
CAT II	Appareil de mesure de catégorie II selon la norme CEI applicable
CAT III	Appareil de mesure de catégorie III selon la norme CEI applicable
CAT IV	Appareil de mesure de catégorie IV selon la norme CEI applicable

This information is subject to
change without notice.
© Keysight Technologies 2023
Edition 3 May 2023



www.keysight.com

KEYSIGHT
TECHNOLOGIES