E43407

Welding adapter for process sensors

ADAPT G1/2-WELD D38 3A

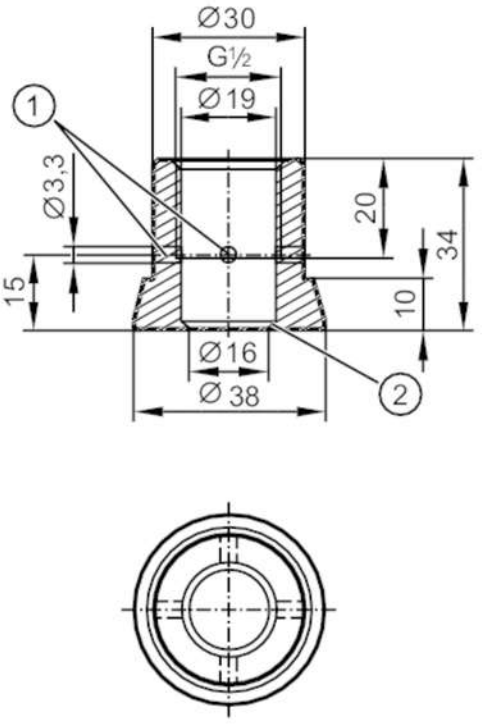

1 Leakage port
2 sealing edge

CRN EC 1935/2004 EHEDG Certified FCM FDA

Application		
Design		with leakage port
Pressure rating	[bar]	50
Note on pressure rating		for the connection sensor - adapter
MAWP (for applications according to CRN)	[bar]	50
Tests / approvals		
Pressure Equipment Directive		A possible classification to PED depends on the application and has to be carried out by the user / operator.
Pressure Equipment Directive EAC		The adapter is intended for use in devices, machines and installations that do not fall under the categories of the technical rule TR CU 032/2013.
Safety instructions		The compatibility between medium and product material has to be checked in all applications.
Mechanical data		
Weight	[g]	205.5
Materials		stainless steel (1.4435 / 316L)
Sensor connection		G 1/2 sealing cone
Process connection		welding adapter Ø 38 mm
Surface characteristics Ra/Rz of the wetted parts		0.4 / 4
Remarks		
Pack quantity		1 pcs.