PERFORMANCE
MADE
SMARTER

Product Manual
9116
Universal Converter

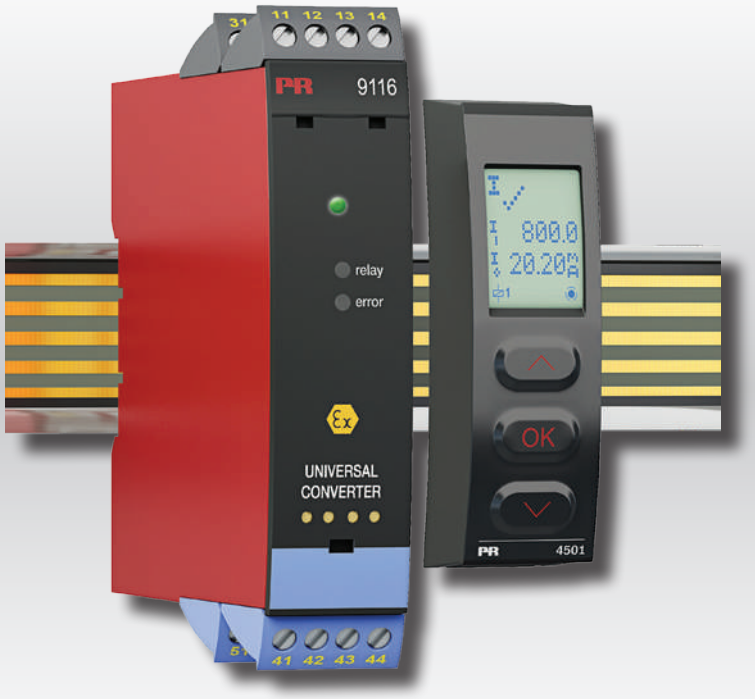

TEMPERATURE | I.S. INTERFACES | COMMUNICATION INTERFACES | MULTIFUNCTIONAL | ISOLATION | DISPLAY

No. 9116V107-UK
Product version: 9116-003

PR electronics

6 Product Pillars
to meet your every need

Individually outstanding, unrivalled in combination

With our innovative, patented technologies, we make signal conditioning smarter and simpler. Our portfolio is composed of six product areas, where we offer a wide range of analog and digital devices covering over a thousand applications in industrial and factory automation. All our products comply with or surpass the highest industry standards, ensuring reliability in even the harshest of environments and have a 5-year warranty for greater peace of mind.



Temperature

Our range of temperature transmitters and sensors provides the highest level of signal integrity from the measurement point to your control system. You can convert industrial process temperature signals to analog, bus or digital communications using a highly reliable point-to-point solution with a fast response time, automatic self-calibration, sensor error detection, low drift, and top EMC performance in any environment.



I.S. Interface

We deliver the safest signals by validating our products against the toughest safety standards. Through our commitment to innovation, we have made pioneering achievements in developing I.S. interfaces with SIL 2 Full Assessment that are both efficient and cost-effective. Our comprehensive range of analog and digital intrinsically safe isolation barriers offers multifunctional inputs and outputs, making PR an easy-to-implement site standard. Our backplanes further simplify large installations and provide seamless integration to standard DCS systems.



Communication

We provide inexpensive, easy-to-use, future-ready communication interfaces that can access your PR installed base of products. All the interfaces are detachable, have a built-in display for readout of process values and diagnostics, and can be configured via push-buttons. Product specific functionality includes communication via Modbus and Bluetooth and remote access using our PR Process Supervisor (PPS) application, available for iOS and Android.



Multifunction

Our unique range of single devices covering multiple applications is easily deployable as your site standard. Having one variant that applies to a broad range of applications can reduce your installation time and training, and greatly simplify spare parts management at your facilities. Our devices are designed for long-term signal accuracy, low power consumption, immunity to electrical noise and simple programming.



Isolation

Our compact, fast, high-quality 6 mm isolators are based on microprocessor technology to provide exceptional performance and EMC-immunity for dedicated applications at a very low total cost of ownership. They can be stacked both vertically and horizontally with no air gap separation between units required.



Display

Our display range is characterized by its flexibility and stability. The devices meet nearly every demand for display readout of process signals, and have universal input and power supply capabilities. They provide a real-time measurement of your process value no matter the industry, and are engineered to provide a user-friendly and reliable relay of information, even in demanding environments.

Universal Converter

9116B

Table of contents

Warning 4
Symbol identification 4
Safety instructions 4
How to demount system 9000 5
Advanced features 6
Application 6
Technical characteristics 6
Applications 7
PR 4511/4501 display / programming front 8
Mounting / demounting the PR 4511/4501 8
Order 9
Accessories 9
Electrical specifications 9
Configuration of sensor error check 14
  Input signal outside range 14
  Sensor error detection 14
  Error indications 15
Connections 16
Block diagram 17
Signal error and cable fault indications without display front 18
Configuration / operating the function keys 19
Routing diagram 22
Routing diagram, advanced settings (ADV.SET) 24
Help text overview 25
Graphic depiction of window 27
Graphic depiction of setpoint 28
Appendix 29
  IECEx Installation Drawing 30
  ATEX Installation Drawing 35
  FM Installation Drawing 40
  Desenho de instalaçao INMETRO 44
Document history 48

Warning



The following operations should only be carried out on a disconnected device and under ESD-safe conditions:

General mounting, wire connection and disconnection.
Troubleshooting the device.

Repair of the device and replacement of circuit breakers must be done by PR electronics A/S only.

Warning



Do not open the front plate of the device as this will cause damage to the connector for the display / programming front PR 4511/4501.
This device contains no DIP-switches or jumpers.

Symbol identification



Triangle with an exclamation mark: Read the manual before installation and commissioning of the device in order to avoid incidents that could lead to personal injury or mechanical damage. Warning/ demand. Potentially lethal situations.



The CE mark proves the compliance of the device with the essential requirements of the directives.



The double insulation symbol shows that the device is protected by double or reinforced insulation.



Ex devices have been approved acc. to the ATEX directive for use in connection with installations in explosive areas. See installation drawings in appendix.

Safety instructions

Definitions

Hazardous voltages have been defined as the ranges: 75 to 1500 Volt DC, and 50 to 1000 Volt AC.
Technicians are qualified persons educated or trained to mount, operate, and also trouble-shoot technically correct and in accordance with safety regulations.
Operators, being familiar with the contents of this manual, adjust and operate the knobs or potentiometers during normal operation.

Receipt and unpacking

Unpack the device without damaging it and check whether the device type corresponds to the one ordered. The packing should always follow the device until this has been permanently mounted.

Environment

Avoid direct sun light, dust, high temperatures, mechanical vibrations and shock, and rain and heavy moisture. If necessary, heating in excess of the stated limits for ambient temperatures should be avoided by way of ventilation.
The device must be installed in pollution degree 2 or better.
The device is designed to be safe at least under an altitude up to 2 000 m.

Mounting

Only technicians, who are familiar with the technical terms, warnings, and instructions in the manual and who are able to follow these, should connect the device. Should there be any doubt as to the correct handling of the device, please contact your local distributor or, alternatively,

PR electronics A/S
www.prelectronics.com

The use of stranded wires is not permitted for mains wiring except when wires are fitted with cable ends.

Descriptions of input / output and supply connections are shown in the block diagram and on the side label.

The device is provided with field wiring terminals and shall be supplied from a Power Supply having double / reinforced insulation. A power switch shall be easily accessible and close to the device. The power switch shall be marked as the disconnecting unit for the device.

For installation on Power Rail 9400 the power is supplied by Power Control Unit 9410.

Year of manufacture can be taken from the first two digits in the serial number.

Calibration and adjustment

During calibration and adjustment, the measuring and connection of external voltages must be carried out according to the specifications of this manual. The technician must use tools and instruments that are safe to use.

Normal operation

Operators are only allowed to adjust and operate devices that are safely fixed in panels, etc., thus avoiding the danger of personal injury and damage. This means there is no electrical shock hazard, and the device is easily accessible.

Cleaning

When disconnected, the device may be cleaned with a cloth moistened with distilled water.

Liability

To the extent the instructions in this manual are not strictly observed, the customer cannot advance a demand against PR electronics A/S that would otherwise exist according to the concluded sales agreement.

How to demount system 9000

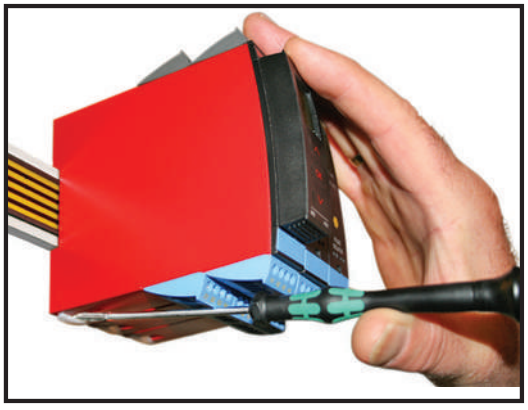

Picture 1:
By lifting the bottom lock, the device is detached from the DIN rail.

Universal converter
9116B

- Input for RTD, TC, Ohm, potentiometer, mA and V
- Supply for 2-wire transmitters
- Active / passive mA output and relay output
- Can be supplied separately or installed on power rail, PR 9400
- SIL 2-certified via Full Assessment

Advanced features

- Configuration and monitoring by way of detachable display front (PR 4511/4501); process calibration, signal and relay simulation.
- Advanced relay configuration, e.g. setpoint, window, delay, sensor error indication and power monitoring
- Copying of the configuration from one device to others of the same type via the display front.
- Reduced Uo Ex data < 8.3 V for active input signals.
- TC inputs with internal or external CJC for higher accuracy.
- Active / passive mA output via the same two terminals

Application

- The device can be mounted in the safe area and in zone 2 / cl. 1 div. 2 and receive signals from zone 0, 1, 2 and zone 20, 21, 22 including M1 / Class I/II/III, Div. 1, Gr. A-G.
- Conversion and scaling of temperature, voltage, potentiometer and linear resistance signals.
- Power supply and signal isolator for 2-wire transmitters.
- Monitoring of error events and cable breakage via the individual status relay and/or a collective electronic signal via the power rail.
- The 9116 has been designed, developed and certified for use in SIL 2 applications according to the requirements of IEC 61508.
- Suitable for the use in systems up to Performance Level "d" according to ISO-13849.

Technical characteristics

- 1 green and 1 red front LED indicate operation status and malfunction. 1 yellow LED indicates relay status.
- 2.6 kVAC galvanic isolation between input, output and supply.

Applications

Input signals:

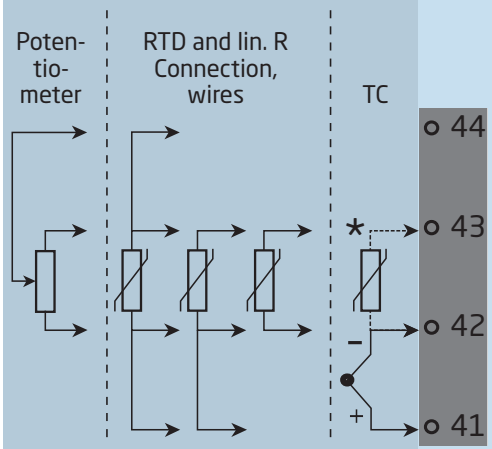

Output signals:

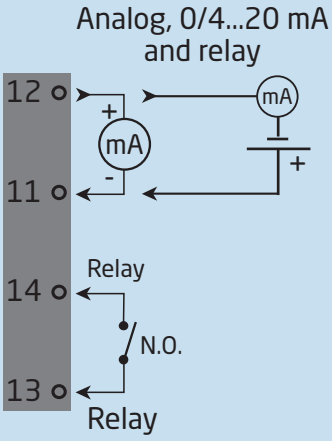

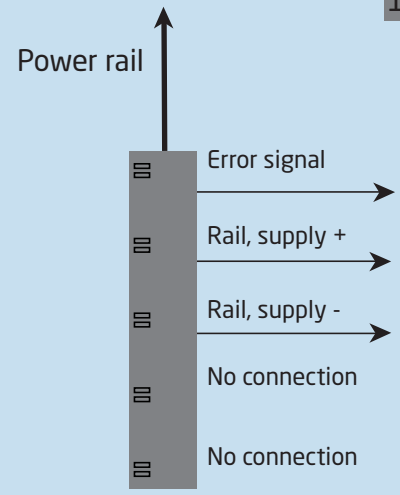

Power connection:

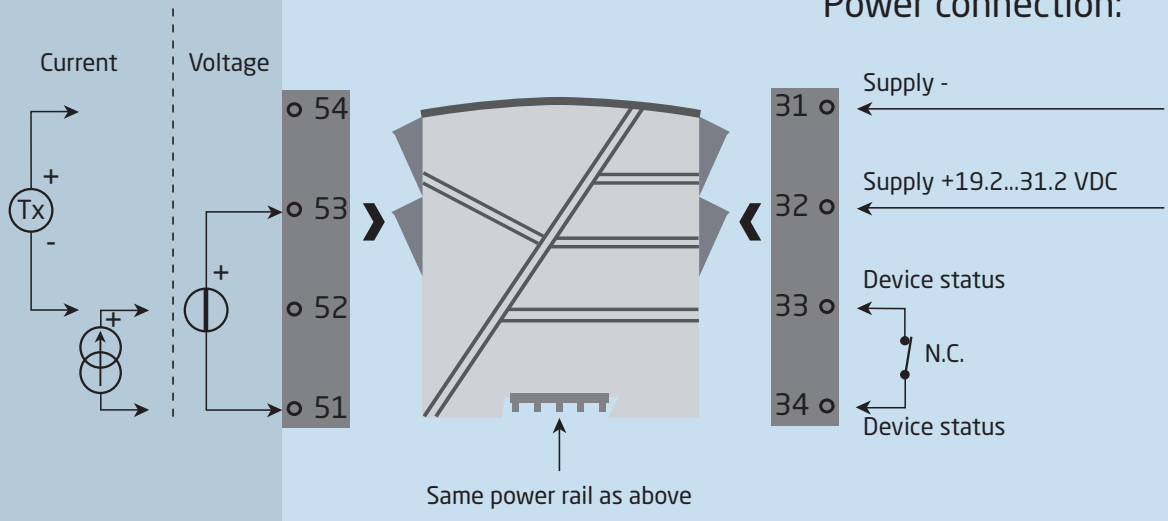

Zone 0, 1, 2, 20, 21, 22, M1 & Cl. I/II/III, Div. 1 gr. A-G

Zone 2 & Cl. 1, Div. 2, gr. A-D or Safe Area

PR 4511/4501 display / programming front



Functionality

The simple and easily understandable menu structure and the explanatory help texts guide you effortlessly and automatically through the configuration steps, thus making the product very easy to use. Functions and configuration options are described in the section "Configuration / operating the function keys".

Application

- Communications interface for modification of operational parameters in 9116.
- Can be moved from one 9116 device to another and download the configuration of the first unit to subsequent units.
- When mounted in the process, the display shows process values and device status.

Technical characteristics

- LCD display with 4 lines:
  Line 1 (H=5.57 mm) shows input status
  Line 2 (H=3.33 mm) toggels between input value and tag. no.
  Line 3 (H=3.33 mm) shows output value and UNIT.
  Line 4 shows status for relay and communication and whether the device is SIL-locked.
  Static dot = SIL-locked and flashing dot = not SIL-locked.
- Programming access can be blocked by assigning a password. The password is saved in the device in order to ensure a high degree of protection against unauthorised modifications to the configuration.

Mounting / demounting the PR 4511/4501

1: Insert the tabs of the PR 4511/4501 into the holes at the top of the device.
2: Hinge the PR 4511/4501 down until it snaps into place.

Demounting of the PR 4511/4501

3: Push the release button on the bottom of the PR 4511/4501 and hinge the the PR 4511/4501 out and up.
4: With the PR 4511/4501 hinged up, remove from holes at the top of the device.

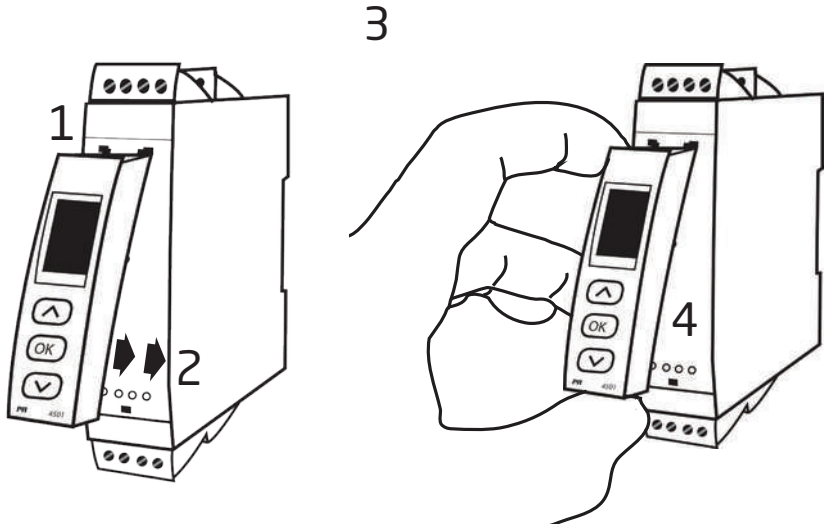

Order

Type	Max. loop voltage	
9116B	Uo 28 VDC	: 1
	Uo 21.4 VDC	: 2

Example: 9116B2

Accessories

4501 = Display / programming front
4511 = Communication enabler
5910Ex = CJC connector
9400 = Power rail
9404 = Module stop for rail
9410 = Power control unit
9421 = Power supply 24 V - Ex nA nC

Electrical specifications

Environmental conditions:

Operating temperature . . . . . -20°C to +60°C
Storage temperature . . . . . -20°C to +85°C
Calibration temperature. . . . . 20...28°C
Relative humidity . . . . . < 95% RH (non-cond.)
Protection degree IP20
Installation in . . . . . Pollution degree 2 & overvoltage category II.

Mechanical specifications:

Dimensions (HxWxD) . . . . . 109 x 23.5 x 104 mm
Dimensions (HxWxD) w/ 4501 / 4511 . . . . . 109 x 23.5 x 116 / 131 mm
Weight approx. . . . . 185 g
Weight incl. 4501 / 4511 (approx.) . . . . . 200 g / 285 g
DIN rail type. . . . . DIN EN 60715 - 35 mm
Wire size . . . . . 0.13...2.08 mm^2 / AWG 26...14 stranded wire
Screw terminal torque. . . . . 0.5 Nm
Vibration. . . . . IEC 60068-2-6
2...13.2 Hz . . . . . ±1 mm
13.2...100 Hz . . . . . ±0.7 g

Common electrical specifications:

Supply voltage . . . . . 19.2...31.2 VDC
Fuse . . . . . 1.25 A SB / 250 VAC

Type	Description	Max. power dissipation	Max. required power
9116B1	1 channel (Ex Uo 28 V)	≤ 1.7 W	≤ 2.1 W
9116B2	1 channel (Ex Uo 21.4 V)	≤ 1.7 W	≤ 2.1 W

Max. required power is the maximum power needed at terminals 31 and 32.
Max. power dissipation is the maximum power dissipated by the device.
If the 9116 is used with the 4511 / 4501, then add 40 mW to the max. power dissipation and 70 mW to the max. required power for each device with the 4511 / 4501.

Isolation - test / working:
- Input to any . . . . . 2.6 kVAC / 300 VAC reinforced isolation
- Analog output to supply . . . . . 2.6 kVAC / 300 VAC reinforced isolation
- Output relay to analog output . . . . . 1.5 kVAC / 150 VAC reinforced isolation or 300 VAC basic isolation
- Status relay to supply . . . . . 1.5 kVAC / 150 VAC reinforced isolation

Communications interface . . . . . Communication enabler 4511 / Programming front 4501
Signal dynamics, input / output . . . . . 24 bit / 16 bit
Signal / noise ratio . . . . . Min. 60 dB (0...100 kHz)
Response time (0...90%, 100...10%):
- Temperature input, programmable . . . . . 1...60 s
- mA / V input, programmable . . . . . 0.4...60 s

Accuracy, the greater of the general and basic values:

General values		
Input type	Absolute accuracy	Temperature coefficient
All	≤ ±0.1% of span	≤ ±0.01% of span / °C

Basic values		
Input type	Basic accuracy	Temperature coefficient
mA	≤ ±16 µA	≤ ±1.6 µA / °C
Volt	≤ ±20 µV	≤ ±2 µV / °C
Pt100, Pt200, Pt 1000	≤ ±0.2°C	≤ ±0.02°C/°C
Pt500, Ni100, Ni120, Ni 1000	≤ ±0.3°C	≤ ±0.03°C/°C
Pt50, Pt400, Ni50	≤ ±0.4°C	≤ ±0.04°C/°C
Pt250, Pt300	≤ ±0.6°C	≤ ±0.06°C/°C
Pt20	≤ ±0.8°C	≤ ±0.08°C/°C
Pt10	≤ ±1.4°C	≤ ±0.14°C/°C
TC type: E, J, K, L, N, T, U	≤ ±1°C	≤ ±0.1°C/°C
TC type: R, S, W3, W5, LR	≤ ±2°C	≤ ±0.2°C/°C
TC type: B 160...400°C	≤ ±4.5°C	≤ ±0.45°C/°C
TC type: B 400...1820°C	≤ ±2°C	≤ ±0.2°C/°C

EMC - immunity influence	< ±0.5% of span
Extended EMC immunity:	
NAMUR NE 21, A criterion, burst	< ±1% of span

Auxiliary supplies for 9116B1:
2-wire supply (terminal 54...52) . . . . . 28...16.5 VDC / 0...20 mA
Auxiliary supplies for 9116B2:
2-wire supply (terminal 54...52) . . . . . 21.4...16.5 VDC / 0...20 mA

RTD, linear resistance and potentiometer input:

Input type	Min. value	Max. value	Standard
Pt100	-200°C	+850°C	IEC 60751
Ni100	-60°C	+250°C	DIN 43760
Linear resist.	0 Ω	10000 Ω	-
Potentiometer	10 Ω	10000 Ω	-

Input for RTD types:
Pt10*, Pt20*, Pt50*, Pt100, Pt200, Pt250, Pt300, Pt400, Pt500, Pt1000
Ni50, Ni100, Ni120, Ni1000
Cable resistance per wire (max.), RTD . . . . . 50 Ω
Sensor current; RTD . . . . . Nom. 0.2 mA
Effect of sensor cable resistance (3- / 4-wire), RTD . . . . . < 0.002 Ω / Ω
Sensor error detection, RTD . . . . . Programmable ON / OFF
Short circuit detection, RTD . . . . . Yes
* No short circuit detection for Pt10, Pt20 and Pt50
* No short circuit detection for Lin. R_0%≤ app. 18 Ω

TC input:

Type	Min. value	Max. value	Standard
B	0°C	+1820°C	IEC 60584-1
E	-100°C	+1000°C	IEC 60584-1
J	-100°C	+1200°C	IEC 60584-1
K	-180°C	+1372°C	IEC 60584-1
L	-200°C	+900°C	DIN 43710
N	-180°C	+1300°C	IEC 60584-1
R	-50°C	+1760°C	IEC 60584-1
S	-50°C	+1760°C	IEC 60584-1
T	-200°C	+400°C	IEC 60584-1
U	-200°C	+600°C	DIN 43710
W3	0°C	+2300°C	ASTM E988-90
W5	0°C	+2300°C	ASTM E988-90
LR	-200°C	+800°C	GOST 3044-84

Cold junction compensation (CJC):
via external sensor in connector 5910 . . . . . 20...28°C ≤ ±1°C
-20...20°C and 28...70°C ≤ ±2°C
via internal CJC sensor . . . . . ±(2.0°C + 0.4°C * Δt)
Δt = internal temperature - ambient temperature
Sensor error detection . . . . . Programmable ON or OFF
(only wire breakage)
Sensor error current:
when detecting . . . . . Nom. 2 µA
else . . . . . 0 µA

Current input:
Measurement range . . . . . 0...23 mA
Programmable measurement ranges . . . . . 0...20 and 4...20 mA
Input resistance . . . . . Nom. 20 Ω + PTC 50 Ω

Sensor error detection:
Loop break 4...20 mA . . . . . Yes
NB: Only when input is selected as 4...20 mA

Voltage input:
Measurement range . . . . . 0...12 VDC
Programmable measurement ranges . . . . . 0...1 / 0.2...1 / 0...5 / 1...5 / 0...10 and 2...10 VDC
Input resistance . . . . . Nom. >10 MΩ

Current output:
Signal range (span) . . . . . 0...23 mA
Programmable signal ranges . . . . . 0...20 / 4...20 / 20...0 and 20...4 mA
Load . . . . . ≤ 600 Ω
Load stability . . . . . ≤ 0.01% of span / 100 Ω
Sensor error detection . . . . . 0 / 3.5 / 23 mA / none
NAMUR NE 43 Upscale / Downscale . . . . . 23 mA / 3.5 mA
Output limitation:
on 4...20 and 20...4 mA signals . . . . . 3.8...20.5 mA
on 0...20 and 20...0 mA signals . . . . . 0...20.5 mA
Current limit . . . . . ≤ 28 mA

Passive 2-wire output installation:
Max. external 2-wire supply . . . . . 26 VDC
Max. load resistance [Ω] . . . . . (Vsupply - 3.5) / 0.023 A
Effect of external 2-wire supply voltage variation . . . . . < 0.005% of span / V

Relay output in safe area:
Relay functions . . . . . Setpoint, Window, Sensor error, Power and Off
Hysteresis, in % of span / display range . . . . . 0.1...25 / 1...25
On and Off delay . . . . . 0...3600 s
Sensor error reaction . . . . . Break / Make / Hold
Max. voltage . . . . . 250 VAC / VDC
Max. AC current . . . . . 2 A
Max. AC power . . . . . 500 VA
Max. DC current, resistive load:
@ U_{relay} ≤ 30 VDC . . . . . 2 ADC
@ U_{relay} >30 VDC . . . . . [1380 x U_{relay}^{-2} x $1.0085^{U_{relay}}$] ADC

Graphic depiction of [1380 x U_{relay}^{-2} x $1.0085^{U_{relay}}$]:

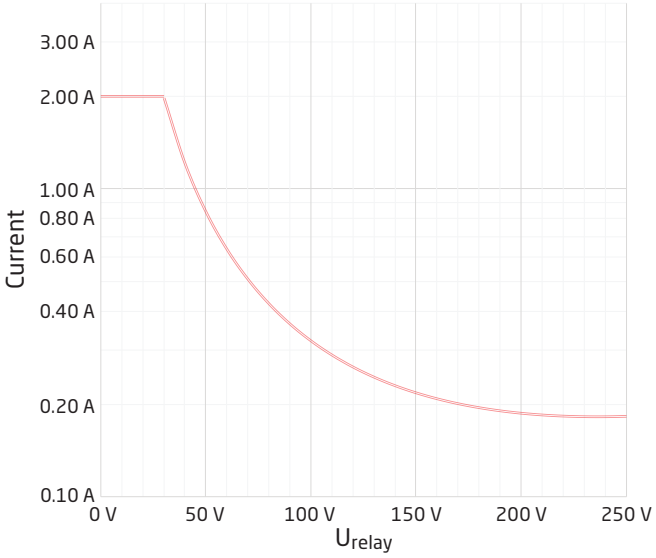

Status relay in safe area:
Max. voltage . . . . . 125 VAC / 110 VDC
Max. current . . . . . 0.5 AAC / 0.3 ADC
Max. AC power . . . . . 62.5 VA / 32 W

of span = of the currently selected measurement range

Observed authority requirements:

EMC	2014/30/EU
LVD	2014/35/EU
ATEX	2014/34/EU
RoHS	2011/65/EU

Approvals:

DNV-GL, Ships & Offshore	Standard for Certification No. 2.4
ClassNK	TA18527M
c UL us, Standard for Safety	UL 61010-1
EAC	TR-CU 020/2011

I.S. / Ex:

ATEX	KEMA 10ATEX0053 X
IECEx	IECEx KEM 10.0022X
c FM us	3038267-C
INMETRO	DEKRA 16.0004 X
CCOE	P337349/4
EAC Ex TR-CU 012/2011	RU C-DK.GB08.V.00410

Functional Safety:

SIL2 Certified & Fully Assessed acc. to IEC 61508

Configuration of sensor error check

Sensor error check:		
Device:	Configuration	Sensor error detection:
9116	ERR.ACT=NONE - OUT.ERR=NONE.	OFF
	Else:	ON

Visualisation in the 4511/4501 of:

Input signal outside range

Outside range readout (IN.LO, IN.HI): If the valid range of the A/D converter or the polynomal is exceeded			
Input	Range	Readout	Limit
VOLT	0...1 V / 0.2...1 V	IN.LO	< -25 mV
		IN.HI	> 1.2 V
	0...10 V / 2...10 V	IN.LO	< -25 mV
		IN.HI	> 12 V
CURR	0...20 mA / 4...20 mA	IN.LO	< -1.05 mA
		IN.HI	> 25.05 mA
LIN.R	0...800 Ω	IN.LO	< -10 Ω
		IN.HI	> 900 Ω
	0...10 kΩ	IN.LO	<-10 Ω
		IN.HI	> 11 kΩ
POTM	0 - 100%	IN.LO	< -0.5 %
		IN.HI	> 100.5 %
TEMP	TC / RTD	IN.LO	< temperature range -2°C
		IN.HI	> temperature range +2°C

Display readout below min. / above max. (-1999, 9999):			
Input	Range	Readout	Limit
All	All	-1999	Display readout <-1999
		9999	Display readout >9999

Sensor error detection

Sensor error detection (SE.BR, SE.SH):			
Input	Range	Readout	Condition
CURR	Loop break (4...20 mA)	SE.BR	<= 3.6 mA; > = 21 mA
POTM	All, SE.BR on all 3-wire	SE.BR	Sensor broken
		SE.SH	Sensor shorted
LIN.R	All	SE.BR	Sensor broken or wire resistance too high
	For Lin. R_0%≥ app. 18 Ω	SE.SH	Sensor shorted
TEMP	All	SE.BR	Sensor broken or wire resistance too high
	Pt100 to Pt1000 and Ni50 to Ni1000	SE.SH	Sensor shorted

Error indications

Readout at hardware error		
Error search	Readout	Cause
CJC sensor error - check device temperature	CJ.ER	Defect internal CJC sensor or CJC temperature out of allowed range**
CJC connector error - check CJC-connector block	CJ.ER	Defect (or missing) CJC-connector or temperature out of allowed range**
Input error - check input connection and reset power	IN.ER	Signal levels on input beyond limits or connected to wrong terminals*
Output error - check output connections and reset power	AO.ER	Error in analogue output current (SIL mode only)*
No communication	NO.CO	No communication with (4511/4501)
Flash memory error - check configuration	FL.ER CO.ER	FLASH error (configuration invalid)***
Invalid configuration type or version	TY.ER	Configuration read from EEprom has invalid type or rev. no.
Hardware error	RA.ER	RAM error*
Hardware error	IF.ER	Internal Flash error*
Hardware error	SW.ER	SW monitor error*
Hardware error	AD.ER	A/D converter error*
Hardware error	AO.SU	Analog output supply error*
Hardware error	CA.ER	Factory calibration error*
Hardware error	CM.ER	Main CPU error*
Hardware error	RE.ER	Relay readback error*
Hardware error	II.ER	Initialisation check error*
Hardware error	RS.ER	Reset error*
Hardware error	IC.ER	Input communication error*
Hardware error	M1.ER	Main CPU to Ch. 1 error*
Hardware error	MC.ER	Main CPU config. error*
Hardware error	MF.ER	Main CPU Flash error*
Hardware error	MR.ER	Main CPU RAM error*
Hardware error	MS.ER	Main CPU supply error*
Hardware error	MP.ER	Main CPU ProgFlow error*
Hardware error	MI.ER	Main CPU initialization check error*
Hardware error	DE.ER	Device error*
Hardware error	FC.ER	Invalid code checksum in 4511/4501

!	All error indications in the display flash once per second. The help text explains the error. If the error is a sensor error, the display backlight flashes as well - this is acknowledged (stopped) by pushing the OK button.
*	Error is acknowledged by resetting the device power.
**	Error can be disregarded by selecting input type different than TC.
***	Error is acknowledged by stepping through the basic setup.

Connections

Power rail connections

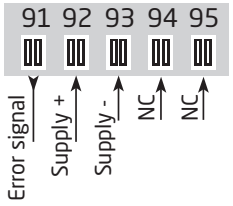

Supply and status relay

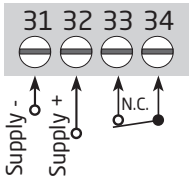

NC = no connection

Inputs:

RTD, 2-wire

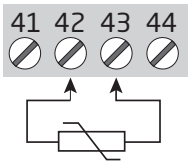

RTD, 3- / 4-wire

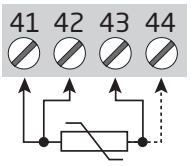

TC, internal CJC sensor

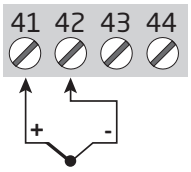

*TC, CJC connector

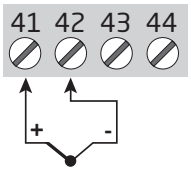

* Order separately:
CJC connector 5910Ex

Resistance, 2-wire

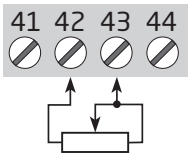

Resistance, 3- / 4-wire

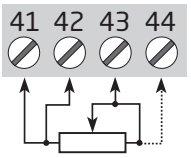

Potentiometer

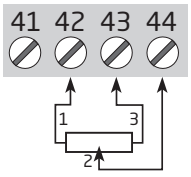

2-wire transmitter

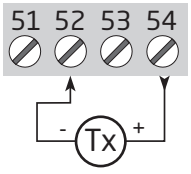

Current

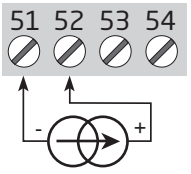

Voltage

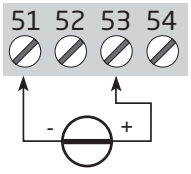

Outputs:

Current (Active output)

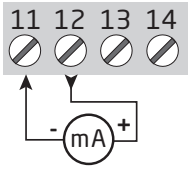

2-wire transmitter (Passive output)

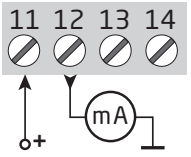

Relay

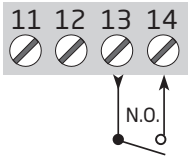

Block diagram

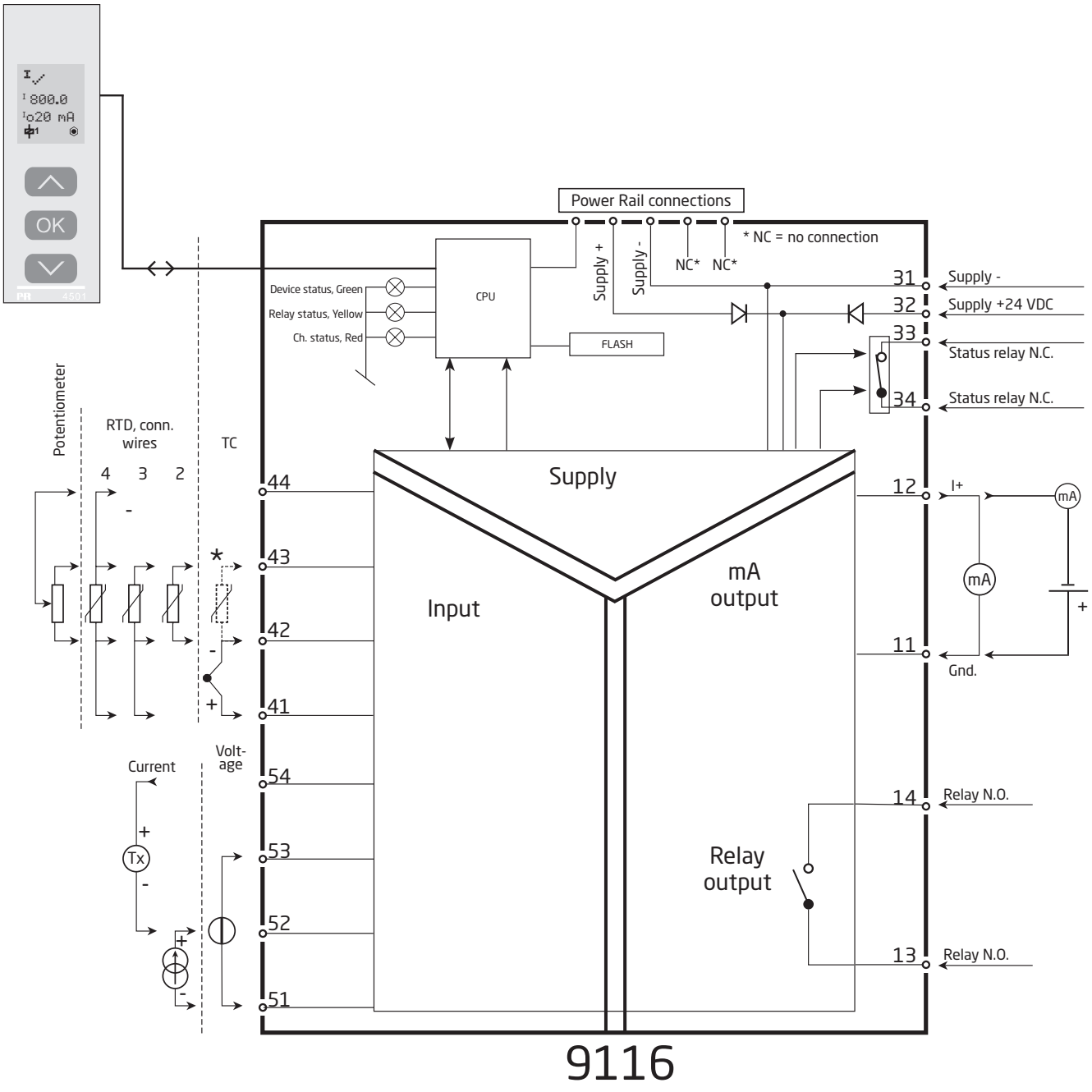

Signal error and cable fault indications without display front

List of LED and error signal indications					
Condition	**Green LED**	**Relay: Yellow LED**	**Error: Red LED**	**Status relay, N.C.**	**Power rail signal status**
No supply	OFF	OFF	OFF	De-energized	Closed
Device defective	OFF		ON	De-energized	Closed
Device OK	Flashing			Energized	Open
Signal OK	Flashing		OFF	Energized	Open
Output relay energized	Flashing	ON	OFF	Energized	Open
Output relay energized w. wire short/break	Flashing	ON	Flashing	De-energized	Closed (if activateded)
Output relay de-energized w. wire short/break	Flashing	OFF	Flashing	De-energized	Closed (if activateded)
Output relay de-energized	Flashing	OFF	OFF	Energized	Open

Configuration / operating the function keys

Documentation for routing diagram.

In general

When configuring the 9116, you will be guided through all parameters and you can choose the settings which fit the application. For each menu there is a scrolling help text which is automatically shown in line 3 on the display.

Configuration is carried out by use of the 3 function keys:

- ⌃ will increase the numerical value or choose the next parameter
- ⌄ will decrease the numerical value or choose the previous parameter
- OK will save the chosen value and proceed to the next menu

When configuration is completed, the display will return to the default state 1.0. Pressing and holding OK will return to the previous menu or return to the default state (1.0) without saving the changed values or parameters.

If no key is activated for 1 minute, the display will return to the default state (1.0) without saving the changed values or parameters.

Further explanations

Password protection: Programming access can be blocked by assigning a password. The password is saved in the device in order to ensure a high degree of protection against unauthorised modifications to the configuration. Default password 2008 allows access to all configuration menus.
Password protection is mandatory in SIL applications.

Selection of units

After choosing the input signal type you can choose which process units should be shown in the display (see table). By selection of temperature input the process value is always displayed in Celsius or Fahrenheit. This is selected in the menu point after selection of temperature input.

CJC

In the CJC menu you can choose between CJC connector and internal cold junction compensation. The CJC connecter (PR 5910Ex) must be ordered separately.

Signal and sensor error indication via display front 4511/4501

Sensor error (see limits in the table) is displayed as SE.BR (sensor break) or SE.SH (sensor short). Signals outside the selected range (not sensor error, see table for limits) are displayed as IN.LO indicating low input signal or IN.HI indicating high input signal. The error indication is displayed as text in line 1 and at the same time the backlight flashes. Line 4 of the display is a status line which shows whether the device is SIL-locked (static dot = SIL-locked and flashing dot = not SIL-locked) as well as relay status and status for communication COM (running circle) indicating correct functioning of 4511/4501.

Signal and sensor error indication without display front

Status of the unit can also be read from the 3 LEDs in the front of the device.

Green flashing LED indicates normal operation.
No light in the green LED indicates lack of supply voltage or error in the device.
Steady red LED indicates fatal error.
Flashing red LED indicates sensor error.

Relay functions

5 different settings of relay function can be selected.

Setpoint:	The unit works as a single trip amplifier
Window:	The relay has a window that is defined by a low and a high setpoint. On both sides of the window the relay has the same status.
Error function:	The relay is activated by sensor error.
Power:	The relay is activated as long as the power is on.
Off:	The relay is deactivated.

Increasing/decreasing: The relay can be set to activate at increasing or decreasing input signal.

Delay: An ON and an OFF delay can be set in the range 0...3600 s.

Hysteresis: A hysteresis can be set at 0.1...25% of the span or between 1 and 25% of display range.

Window: The window function is selected by choosing "window" in the menu and defining a high and a low setpoint.
See the graphic depiction of the window functions on page 27.

Setpoint: The setpoint function is selected by choosing "setpoint" in the menu and entering the desired limit. The device then works as a single limit switch.
See the graphic depiction of the setpoint functions on page 28.

An activated relay means that the contact is closed if the contact function "normally open" is selected, and the contact is open if the contact function "normally closed" is selected.
The delay time for activation and deactivation can be set independently of each other in the menus ON.DEL and OFF DEL respectively.

Advanced functions

The unit gives access to a number of advanced functions which can be reached by answering "Yes" to the point "ADV.SET".

Display setup: Here you can adjust the brightness contrast and the backlight. Setup of TAG numbers with 5 alphanumerics. Input value is always shown in line 2. Selection of functional readout in line 3 of the display - choose between readout of analog output or tag no or alternating display.

Two-point process calibration: The device can be process-calibrated in 2 points to fit a given input signal . A low input signal (not necessarily 0%) is applied and the actual value is entered via 4511/4501. Then a high signal (not necessarily 100%) is applied and the actual value is entered via 4511/4501. If you accept to use the calibration, the device will work according to this new adjustment. If you later reject this menu point or choose another type of input signal the device will return to factory calibration.

Process simulation function: In the menu point "EN.SIM" it is possible to simulate an input signal by means of the arrow keys and thus control the output signal up or down or the relay state OFF and ON. You must exit the menu by pressing OK (no time-out).
The simulation function exits automatically, if the 4511/4501 is detached.

Password: Here you can choose a password between 0000 and 9999 in order to protect the unit against unauthorised modifications to the configuration. The unit is delivered default without password.

Memory: In the memory menu you can save the configuration of the device in the 4511/4501, and then move the 4511/4501 onto another device of the same type and download the configuration in the new device.

Language: In the menu "LANG" you can choose between 7 different language versions of help texts that will appear in the menu. You can choose between UK, DE, FR, IT, ES, SE and DK.

Power rail: In the menu "RAIL" you can choose if sensor errors are transmitted to the central surveillance in the PR 9410 power control unit.

Safety Integrity Level (SIL): See Safety Manual for details.

PR
SIL 2
IEC 61508
CERTIFIED
Full assessment

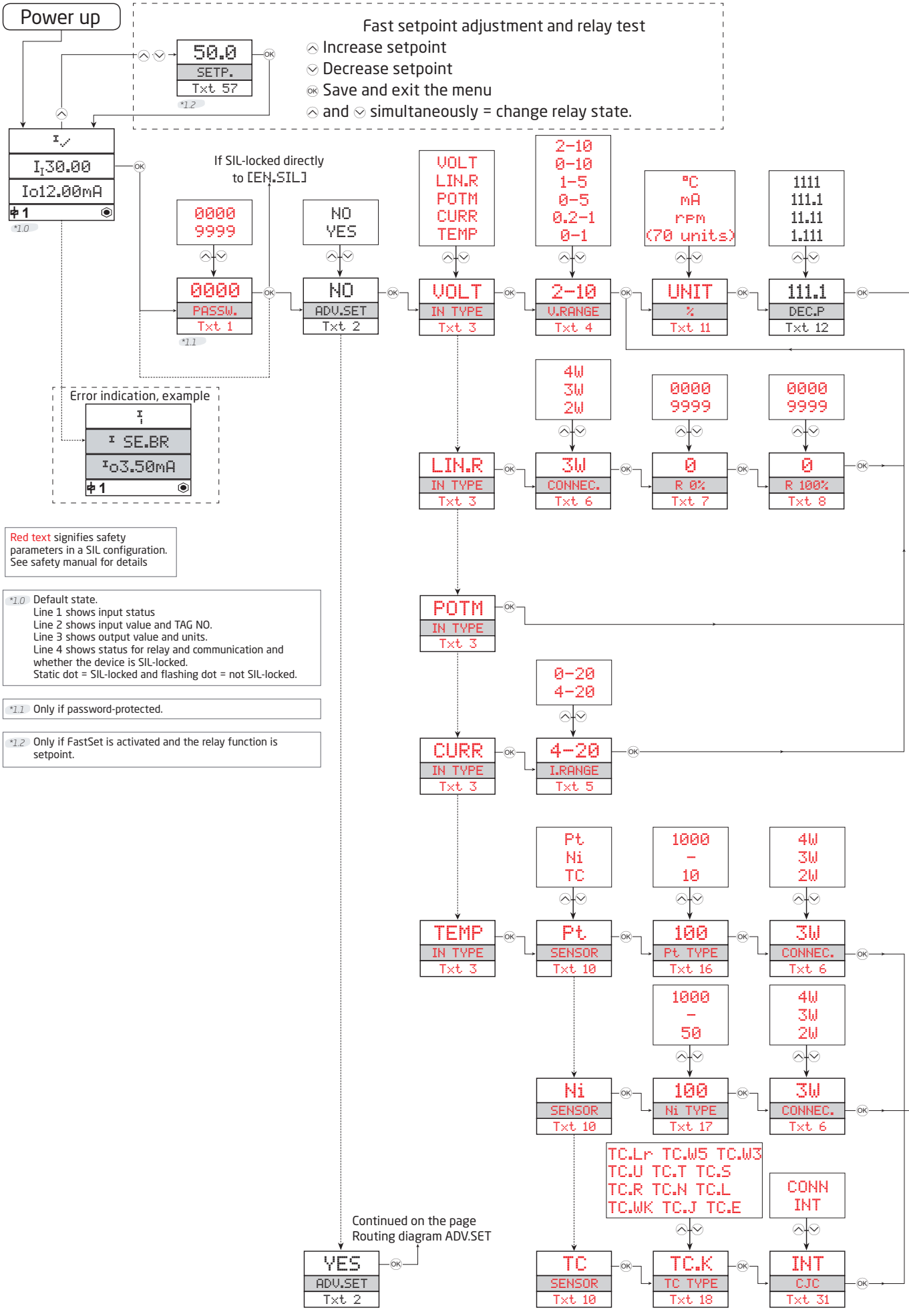
Power up
Fast setpoint adjustment and relay test
Increase setpoint
Decrease setpoint
Save and exit the menu
and simultaneously = change relay state.
50.0
SETP.
Txt 57
*1.2
I
I 30.00
Io12.00mA
1
*1.0
If SIL-locked directly to [EN.SIL]
0000
9999
0000
PASSW.
Txt 1
*1.1
NO
YES
NO
ADV.SET
Txt 2
VOLT
LIN.R
POTM
CURR
TEMP
VOLT
IN TYPE
Txt 3
2-10
0-10
1-5
0-5
0.2-1
0-1
2-10
V.RANGE
Txt 4
°C
mA
rpm
(70 units)
UNIT
%
Txt 11
1111
111.1
11.11
1.111
111.1
DEC.P
Txt 12
Error indication, example
I
I SE.BR
Io3.50mA
1
4W
3W
2W
3W
CONNEC.
Txt 6
0000
9999
0
R 0%
Txt 7
0000
9999
0
R 100%
Txt 8
LIN.R
IN TYPE
Txt 3
POTM
IN TYPE
Txt 3
0-20
4-20
4-20
I.RANGE
Txt 5
CURR
IN TYPE
Txt 3
Pt
Ni
TC
1000
–
10
4W
3W
2W
TEMP
IN TYPE
Txt 3
Pt
SENSOR
Txt 10
100
Pt TYPE
Txt 16
3W
CONNEC.
Txt 6
1000
–
50
4W
3W
2W
Ni
SENSOR
Txt 10
100
Ni TYPE
Txt 17
3W
CONNEC.
Txt 6
TC.Lr TC.W5 TC.W3
TC.U TC.T TC.S
TC.R TC.N TC.L
TC.WK TC.J TC.E
CONN
INT
TC
SENSOR
Txt 10
TC.K
TC TYPE
Txt 18
INT
CJC
Txt 31
YES
ADV.SET
Txt 2
Continued on the page
Routing diagram ADV.SET
Red text signifies safety parameters in a SIL configuration. See safety manual for details
*1.0 Default state.
Line 1 shows input status
Line 2 shows input value and TAG NO.
Line 3 shows output value and units.
Line 4 shows status for relay and communication and whether the device is SIL-locked.
Static dot = SIL-locked and flashing dot = not SIL-locked.
*1.1 Only if password-protected.
*1.2 Only if FastSet is activated and the relay function is setpoint.

Routing diagram

If no key is activated for 1 minute, the display will return to the default state 1.0 without saving configuration changes.

▲ Increase value / choose next parameter

▼ Decrease value / choose previous parameter

OK Save the chosen value and proceed to the next menu

Hold OK Back to previous menu / return to menu 1.0 without saving.

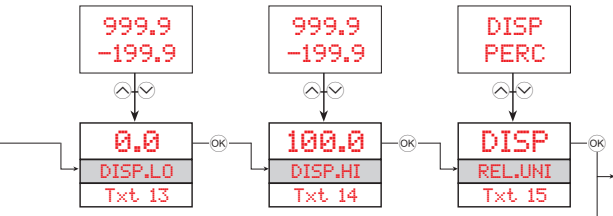

Continued on the next page

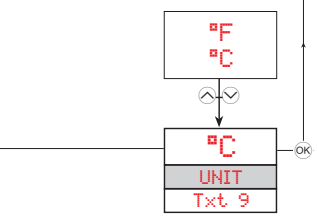

Selectable UNITS:

@C	s	rpm	MWh	ohm
@F	min	Hz	kWh	S
K	m/s	t	W	uS
%	mm/s	kg	GW	m3/min
m	m/min	g	MW	m3/h
cm	m/h	N	kW	l/s
mm	in/s	Pa	hP	l/min
um	ips	MPa	A	l/h
ft	ft/s	kPa	kA	gal/min
in	in/min	hPa	mA	gal/h
mils	ft/min	bar	uA	t/h
yd	in/h	mbar	V	mol
m3	ft/h	kj	kV	pH
l	m/s2	Wh	mV	[blank]

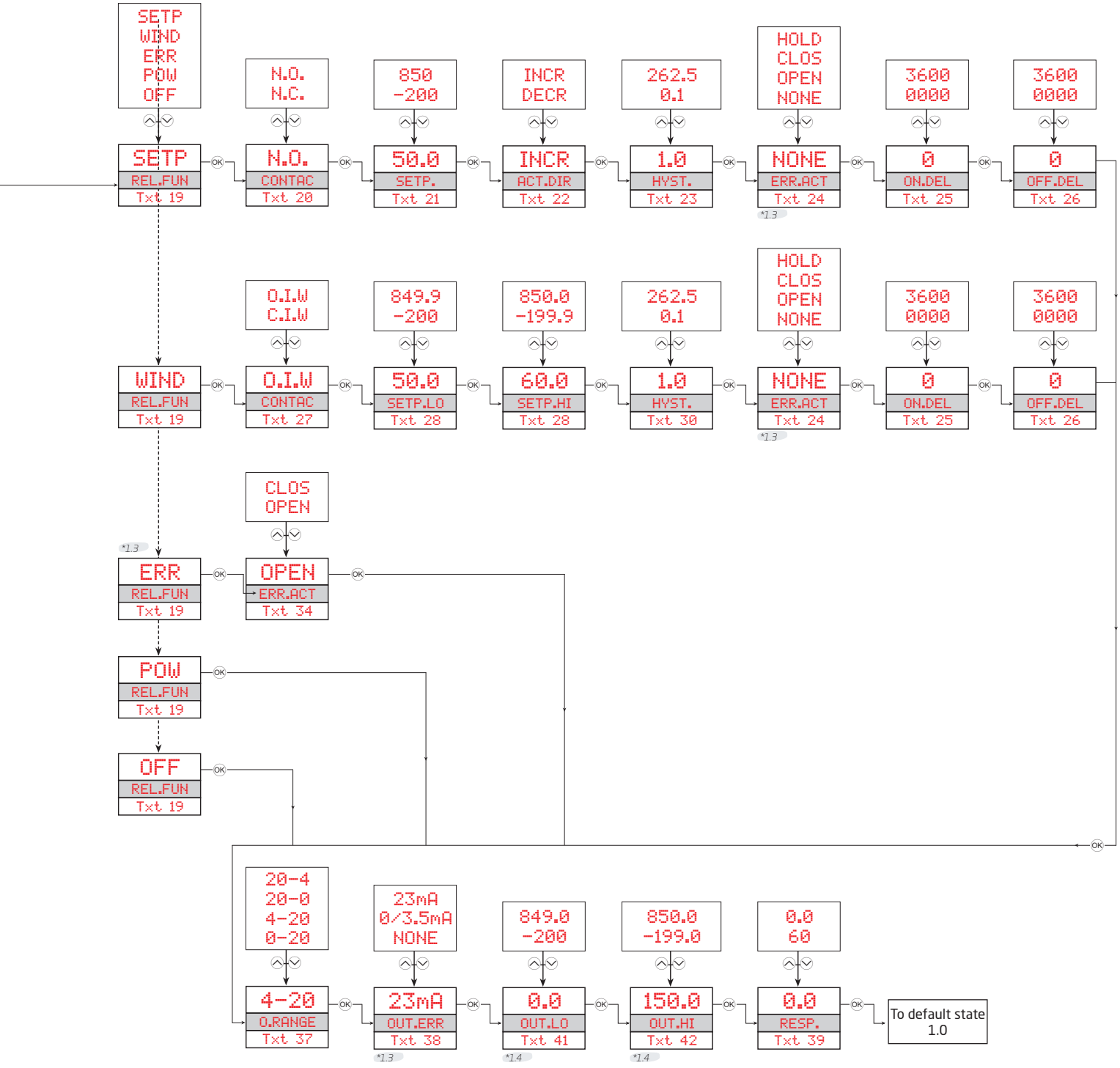

1.3 Only if input types support sensor error check.
Not valid for these input signals: 0...20 mA and voltage.

1.4 Only if input signal is temperaure.

1.5 Only if the configuration is not protected by a password.

Routing diagram, advanced settings (ADV.SET)

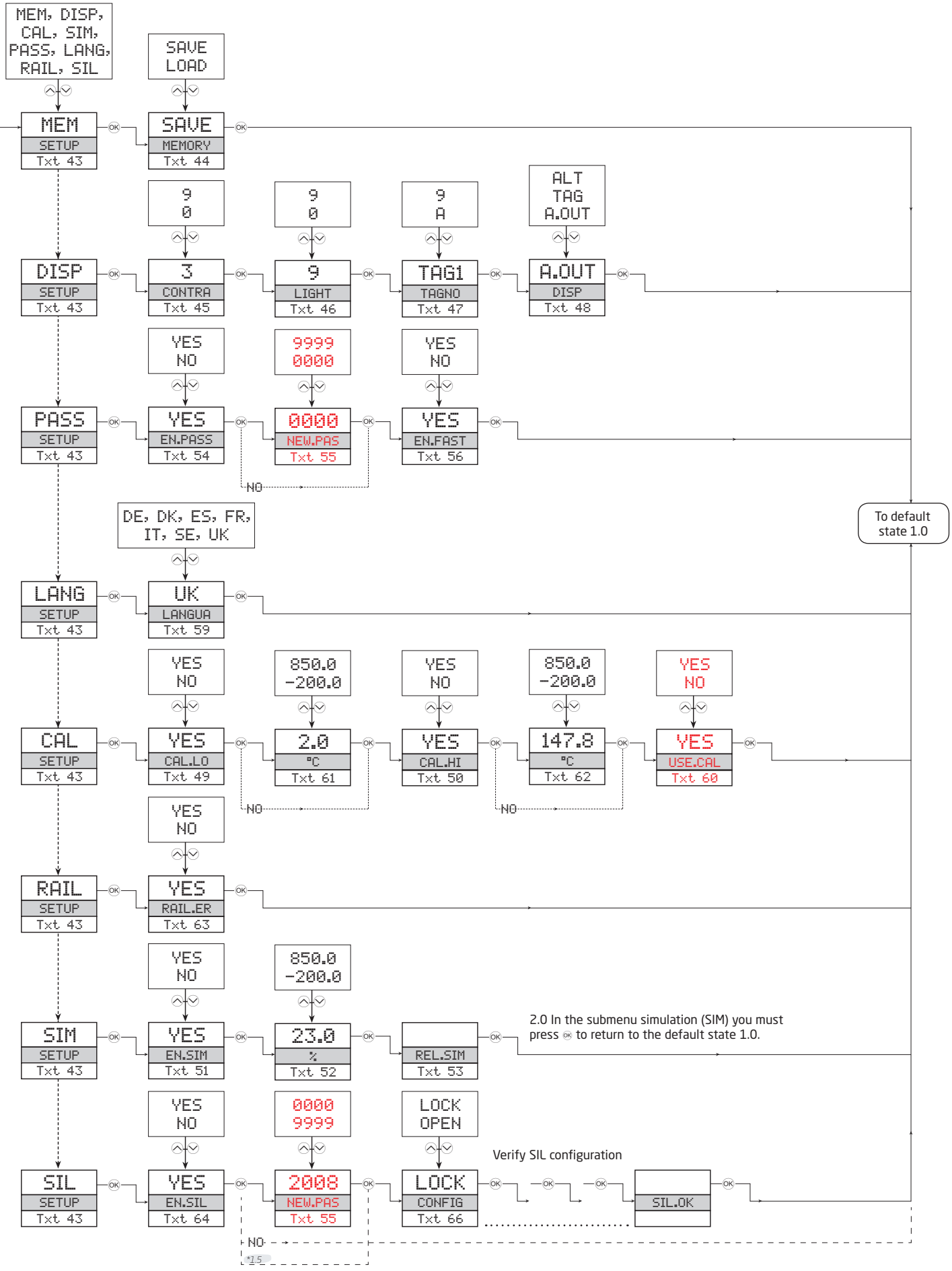

Help text overview

[01] Set correct password
[02] Enter Advanced setup menu?
[03] Select Temperature input
Select Potentiometer input
Select Linear resistance input
Select Current input
Select Voltage input
[04] Select 0.0-1 V input range
Select 0.2-1 V input range
Select 0-5 V input range
Select 1-5 V input range
Select 0-10 V input range
Select 2-10 V input range
[05] Select 0-20 mA input range
Select 4-20 mA input range
[06] Select 2-Wire sensor connection
Select 3-Wire sensor connection
Select 4-Wire sensor connection
[07] Set Resistance value low
[08] Set Resistance value high
[09] Select Celsius as temperature unit
Select Fahrenheit as temperature unit
[10] Select TC sensor type
Select Ni sensor type
Select Pt sensor type
[11] Select Display unit
[12] Select Decimal point position
[13] Set Display range low
[14] Set Display range high
[15] Select Relay setpoint in % of input range
Select Relay setpoint in display units
[16] Select Pt10 sensor type
Select Pt20 sensor type
Select Pt50 sensor type
Select Pt100 sensor type
Select Pt200 sensor type
Select Pt250 sensor type
Select Pt300 sensor type
Select Pt400 sensor type
Select Pt500 sensor type
Select Pt1000 sensor type
[17] Select Ni50 sensor type
Select Ni100 sensor type
Select Ni120 sensor type
Select Ni1000 sensor type
[18] Select TC-B sensor type
Select TC-E sensor type
Select TC-J sensor type
Select TC-K sensor type
Select TC-L sensor type
Select TC-N sensor type
Select TC-R sensor type
Select TC-S sensor type
Select TC-T sensor type
Select TC-U sensor type
Select TC-W3 sensor type
Select TC-W5 sensor type
Select TC-Lr sensor type
[19] Select OFF function - relay is permanently off
Select POWER function - relay indicates power status OK
Select ERROR function - relay indicates sensor error only
Select WINDOW function - relay is controlled by 2 setpoints
Select SETPOINT function - relay is controlled by 1 setpoint
[20] Select Normally Closed contact
Select Normally Open contact
[21] Set Relay setpoint
[22] Select Action on decreasing signal
Select Action on increasing signal
[23] Set Relay hysteresis
[24] Select No error action - undefined status at error
Select Open relay contact at error
Select Close relay contact at error
Select Hold relay status at error
[25] Set Relay ON delay in seconds
[26] Set Relay OFF delay in seconds
[27] Select Contact is Closed Inside Window
Select Contact is Open Inside Window
[28] Set Relay window setpoint low
[29] Set Relay window setpoint high
[30] Set Relay window hysteresis
[31] Select Internal temperature sensor
Select CJC connector (Accessory)
[34] Select Open relay contact at error
Select Close relay contact at error
[37] Select 0-20 mA outout range
Select 4-20 mA output range
Select 20-0 mA output range
Select 20-4 mA output range
[38] Select No error action - output undefined at error
Select Downscale at error
Select Namur NE43 downscale at error
Select Namur NE43 upscale at error
[39] Select Analogue output response time in seconds.
[41] Set Temperature for analogue output low
[42] Set Temperature for analogue output high
[43] Enter SIL setup
Enter Simulation mode
Enter Rail setup
Perform Process Calibration
Enter Language setup
Enter Password setup
Enter Display setup
Perform Memory operations
[44] Load saved configuration into module
Save configuration in display front
[45] Adjust LCD contrast
[46] Adjust LCD backlight
[47] Write a 5-character channel TAG
[48] Show Analog output value in display
Show TAG on display
Alternate shown information in display

[49] Calibrate Input low to process value?
[50] Calibrate Input high to process value?
[51] Enable input simulation?
[52] Set the input simulation value
[53] Relay simulation - use ⌃ to toggle relay
[54] Enable Password protection?
[55] Set New password
[56] Enable Fastset functionality?
[57] Relay setpoint - press OK to save
[58] Relay setpoint - Read only
[59] Select Language
[60] Use process calibration values?
[61] Set value for low calibration point
[62] Set value for high calibration point
[63] Enable Rail status signal output?
[64] Enable SIL configuration lock?
0...20 mA is not a valid output range for SIL operation
[65] is channel using process-compensated calibration data?
[66] Configuration SIL status (Open / Locked)
[80] Sensor short circuit
[81] Sensor wire breakage
[82] Display underrange
[83] Display overrange
[84] Input underrange
[85] Input overrange
[86] Input error - check input connections and reset power
[87] Output error - check connentions and reset power
[88] Flash memory error - chek configuration
[89] Invalid configuration type or version
[90] Hardware error
[91] CJC sensor error - check device temperature
[92] CJC error - check CJC connector block
[93] No communication

Graphic depiction of window

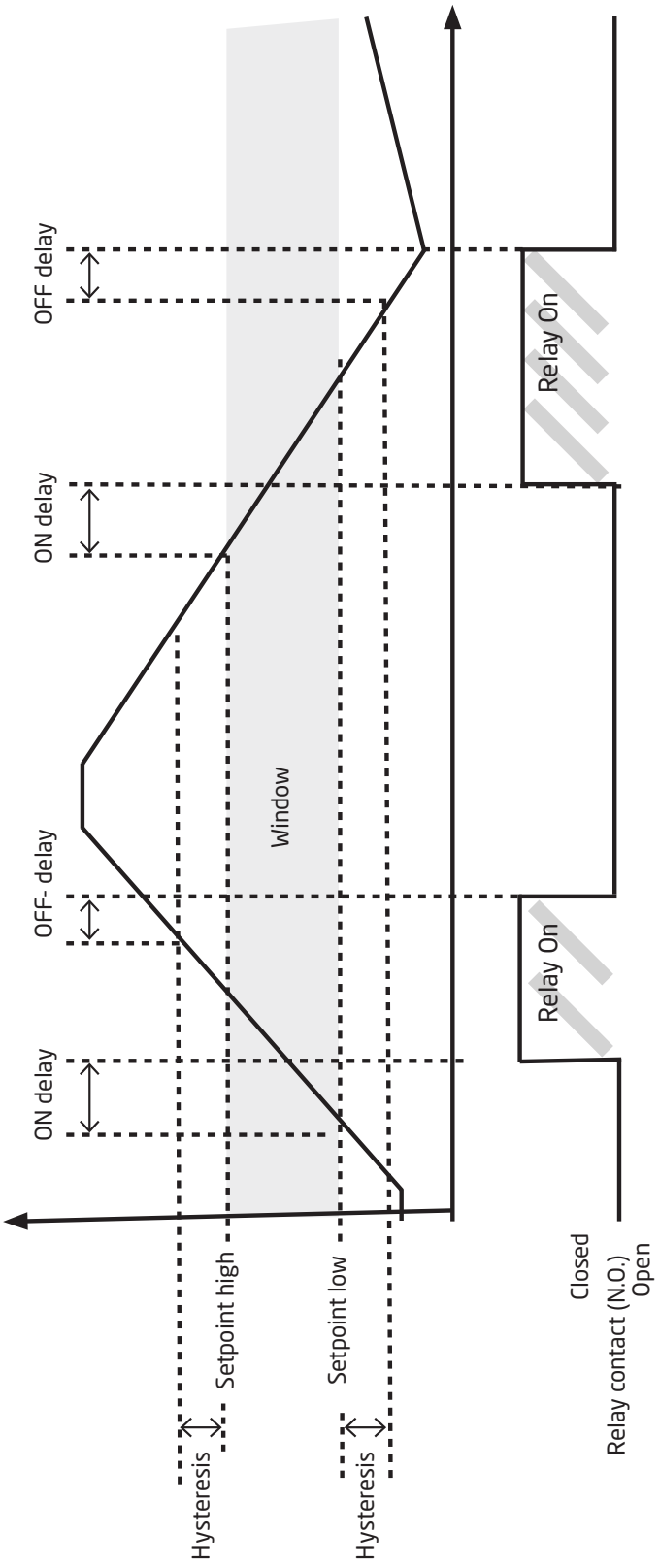

Graphic depiction of setpoint

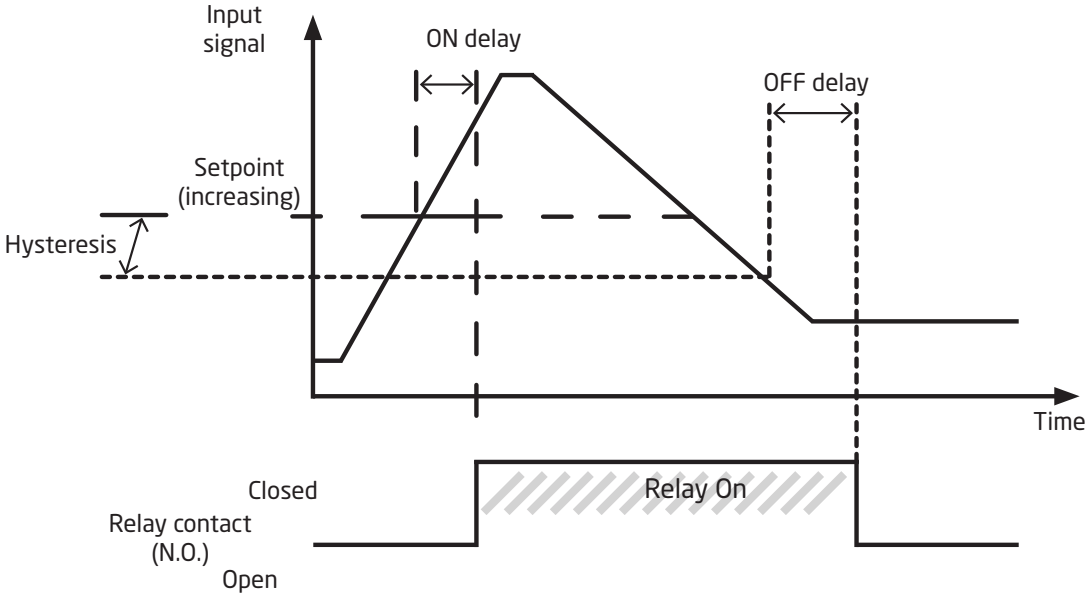

Appendix

IECEx installation drawing

ATEX Installation Drawing

FM Installation Drawing

Desenho de Instalaçao INMETRO

Safety Manual

LERBAKKEN 10, 8410 ROENDE DENMARK

IECEx Installation drawing

For safe installation of 9116 the following must be observed. The module shall only be installed by qualified personnel who are familiar with the national and international laws, directives and standards that apply to this area.
Year of manufacture can be taken from the first two digits in the serial number.

For Installation in Zone 2 the following must be observed.
The 4501 programming module is to be used solely with PR electronics modules. It is important that the module is undamaged and has not been altered or modified in any way. Only 4501 modules free of dust and moisture shall be installed.

IECEx Certificate:	KEM 10.0022X
Marking 9116Bxx:	[Ex ia Ga] IIC/IIB/IIA Ex nA nC IIC T4 Gc [Ex ia Da] IIIC [Ex ia Ma] I
Marking 9116Axx:	Ex nA nC IIC T4 Gc
Standards	IEC60079-11:2011, IEC60079-0:2011, IEC60079-15:2010

9116Bxx Installation:

Hazardous area
Zone 0, 1, 2, 20, 21 and 22

Non Hazardous area
or Zone 2

-20 ≤Ta ≤ +60ºC

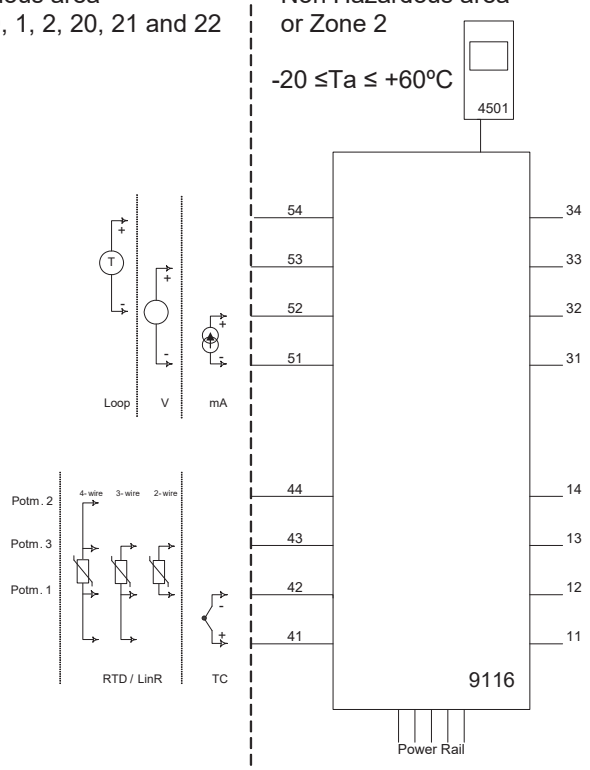

Supply terminal (31,32)
Voltage: 19.2 – 31.2 VDC

Status relay, terminal (33,34)

Zone 2 installation:

Voltage max:	32 VAC/ 32 VDC
Power max:	16 VA / 32 W
Current max:	0.5 A AC / 1 A DC

Relay output, terminal (13,14)

Zone 2 installation

Voltage max:	32 V AC / 30 VDC
Power max:	64 VA / 60 W
Current max:	2 A AC / 2 ADC

(terminal 11,12,13,14)
(terminal 31,32,33,34)
(terminal 91,92,93,94,95)
U_m: 253 V max. 400 Hz

LERBAKKEN 10, 8410 ROENDE DENMARK

Module 9116B1	
Terminal 51-52, 51-53	
Ui	30 V
Ii	120 mA
Pi	900 mW
Ci	3 nF
Li	1 µH

Module 9116B2	
Terminal 51-52, 51-53	
Ui	30 V
Ii	120 mA
Pi	900 mW
Ci	3 nF
Li	1 µH

Module 9116B1 Terminal 51-54, 52-54		Group	Co	Lo	Lo/Ro
Uo	28 V	IIC	80 nF	4 mH	54 µH/Ω
Io	93 mA	IIB	640 nF	16 mH	218 µH/Ω
Po	650 mW	IIA	2.1 µF	32 mH	436 µH/Ω

Module 9116B2 Terminal 51-54, 52-54		Group	Co	Lo	Lo/Ro
Uo	21.4 V	IIC	0.16 µF	4 mH	54 µH/Ω
Io	93 mA	IIB	1.13 µF	16 mH	218 µH/Ω
Po	650 mW	IIA	4.15 µF	32 mH	436 µH/Ω

Module 9116B1 Terminal 51-53		Group	Co	Lo	Lo/Ro
Uo	28 V	IIC	80 nF	1000 mH	4 mH/Ω
Io	1.1 mA	IIB	640 nF	1000 mH	17 mH/Ω
Po	8 mW	IIA	2.1 µF	1000 mH	35 mH/Ω

Module 9116B2 Terminal 51-53		Group	Co	Lo	Lo/Ro
Uo	21.4 V	IIC	0.16 µF	1000 mH	4 mH/Ω
Io	1.1 mA	IIB	1.13 µF	1000 mH	17 mH/Ω
Po	8 mW	IIA	4.15 µF	1000 mH	35 mH/Ω

Module 9116B1 Terminal 51-52		Group	Co	Lo	Lo/Ro
Uo	8.3 V	IIC	7 µF	1000 mH	100 mH/Ω
Io	0.2 mA	IIB	73 µF	1000 mH	400 mH/Ω
Po	0.4 mW	IIA	1000 µF	1000 mH	800 mH/Ω

Module 9116B1 Terminal 41,42,43,44		Group	Co	Lo	Lo/Ro
Uo	8.3 V	IIC	7 µF	207 mH	1 mH/Ω
Io	13.1 mA	IIB	73 µF	828 mH	5 mH/Ω
Po	27.3 mW	IIA	1000 µF	1000 mH	10 mH/Ω

Module 9116B2 Terminal 51-52		Group	Co	Lo	Lo/Ro
Uo	8.3 V	IIC	7 µF	1000 mH	100 mH/Ω
Io	0.2 mA	IIB	73 µF	1000 mH	400 mH/Ω
Po	0.4 mW	IIA	1000 µF	1000 mH	800 mH/Ω

Module 9116B2 Terminal 41,42,43,44		Group	Co	Lo	Lo/Ro
Uo	8.3 V	IIC	7 µF	207 mH	1 mH/Ω
Io	13.1 mA	IIB	73 µF	828 mH	5 mH/Ω
Po	27.3 mW	IIA	1000 µF	1000 mH	10 mH/Ω

Installation notes:

For group I (mines), the parameters for group IIA apply.

Install in pollution degree 2, overvoltage category II as defined in IEC60664-1

Do not separate connectors when energized and an explosive gas mixture is present.

Do not mount or remove modules from the Power Rail when an explosive gas mixture is present.

Disconnect power before servicing.

The wiring of unused terminals is not allowed.

In type of protection [Ex ia Da] the parameters for intrinsic safety for gas group IIB are applicable.

For installation in Zone 2, the module shall be installed in an enclosure in type of protection Ex n or Ex e, providing a degree of protection of at least IP54. Cable entry devices and blanking elements shall fulfill the same requirements.

For installation on Power Rail in Zone 2, only Power Rail type 9400 supplied by Power Control Unit type 9410 (Type Examination Certificate KEMA 07ATEX0152 X) is allowed.

LERBAKKEN 10, 8410 ROENDE DENMARK

9116Bxx Installation:

Hazardous area
Zone 0,1,2, 20, 21, 22

Non Hazardous area
or Zone 2

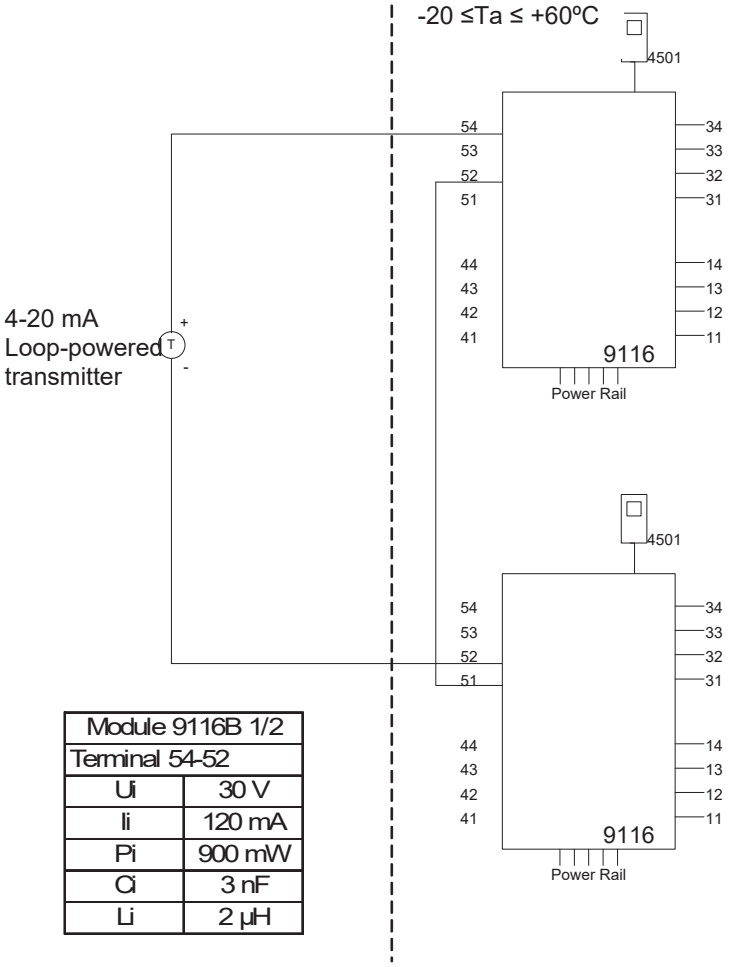

Module 9116B 1/2	
Terminal 54-52	
Ui	30 V
Ii	120 mA
Pi	900 mW
Ci	3 nF
Li	2 µH

Supply terminal (31,32)
Voltage: 19.2 – 31.2 VDC

Status relay, terminal (33,34)

Zone 2 installation:
Voltage max: 32 VAC/ 32 VDC
Power max: 16 VA / 32 W
Current max: 0.5 A AC / 1 A DC

Relay output, terminal (13,14)

Zone 2 installation
Voltage max: 32 V AC / 30 VDC
Power max: 64 VA / 60 W
Current max: 2 A AC / 2 ADC

(terminal 11,12,13,14)
(terminal 31,32,33,34)
(terminal 91,92,93,94,95)
$U_{m:}$ 253 V max. 400 Hz

Module 9116B1 Term. 54-52; 51-52		Group	Co	Lo	Lo/Ro
Uo	28 V	IIC	80 nF	4 mH	54 µH/Ω
Io	93 mA	IIB	640 nF	16 mH	218 µH/Ω
Po	650 mW	IIA	2.1 µF	32 mH	436 µH/Ω

Module 9116B2 Term. 54-52; 51-52		Group	Co	Lo	Lo/Ro
Uo	21.4 V	IIC	0.16 µF	4 mH	54 µH/Ω
Io	93 mA	IIB	1.13 µF	16 mH	218 µH/Ω
Po	650 mW	IIA	4.15 µF	32 mH	436 µH/Ω

LERBAKKEN 10, 8410 ROENDE DENMARK

9116Bxx Installation:

Hazardous area
Zone 0, 1, 2, 20, 21, 22

Non Hazardous area
or Zone 2

-20 ≤Ta ≤ +60ºC

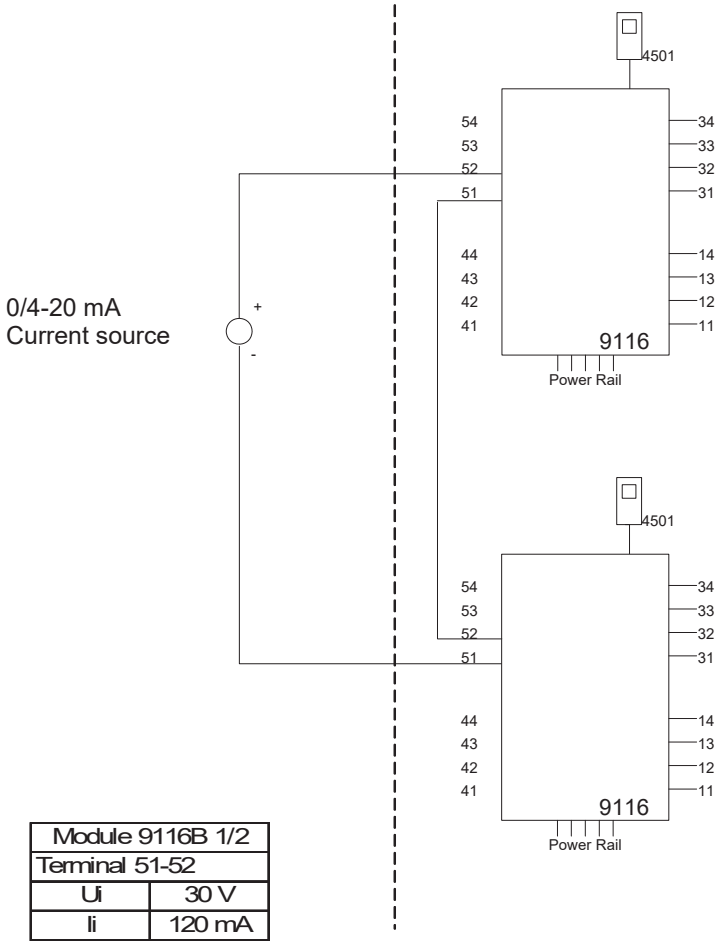

Supply terminal (31,32)
Voltage: 19.2 – 31.2 VDC

Status relay, terminal (33,34)

Zone 2 installation:
Voltage max: 32 VAC/ 32 VDC
Power max: 16 VA / 32 W
Current max: 0.5 A AC / 1 A DC

Relay output, terminal (13,14)

Zone 2 installation
Voltage max: 32 V AC / 30 VDC
Power max: 64 VA / 60 W
Current max: 2 A AC / 2 ADC

(terminal 11,12,13,14)
(terminal 31,32,33,34)
(terminal 91,92,93,94,95)
U_m: 253 V max. 400 Hz

Module 9116B 1/2	
Terminal 51-52	
Ui	30 V
Ii	120 mA
Pi	900 mW
Ci	3 nF
Li	2 µH

Module 9116B 1/2 Term. 52-51, 51-52		Group	Co	Lo	Lo/Ro
Uo	16.6 V	IIC	0.4 µF	100 mH	25mH/Ω
Io	0.2 mA	IIB	2.3 µF	100 mH	100mH/Ω
Po	0.8 mW	IIA	9.5 µF	100 mH	200mH/Ω

LERBAKKEN 10, 8410 ROENDE DENMARK

9116Axx Installation:

Non Hazardous area or Zone 2

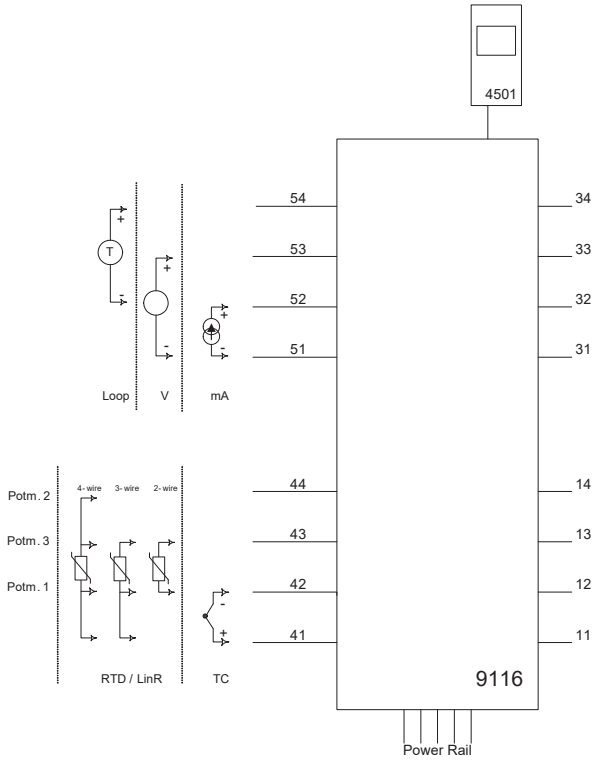

Supply terminal (31,32)
Voltage: 19.2 – 31.2 VDC

Status relay, terminal (33,34)

Zone 2 installation:
Voltage max: 32 VAC/ 32 VDC
Power max: 16 VA / 32 W
Current max: 0.5 A AC / 1 A DC

Relay output, terminal (13,14)

Zone 2 installation
Voltage max: 32 V AC / 30 VDC
Power max: 64 VA / 60 W
Current max: 2 A AC / 2 ADC

For installation in Zone 2, the module shall be installed in an enclosure in type of protection Ex n or Ex e, providing a degree of protection of at least IP54. Cable entry devices and blanking elements shall fulfill the same requirements.

For installation on Power Rail in Zone 2, only Power Rail type 9400 supplied by Power Control Unit type 9410 (Type Examination Certificate IECEx KEM 08.0025X) is allowed.

The 4501 programming module is to be used solely with PR electronics' modules. It is important that the module is undamaged and has not been altered or modified in any way.
Only 4501 modules free of dust and moisture shall be installed.

LERBAKKEN 10, 8410 RØNDE DENMARK

ATEX Installation drawing

For safe installation of 9116 the following must be observed. The module shall only be installed by qualified personnel who are familiar with the national and international laws, directives and standards that apply to this area.
Year of manufacture can be taken from the first two digits in the serial number.

For installation in Zone 2 the following must be observed.
The 4501 programming module is to be used solely with PR electronics' modules. It is important that the module is undamaged and has not been altered or modified in any way.
Only 4501 modules free of dust and moisture shall be installed.

ATEX Certificate:	KEMA 10 ATEX 0053 X
Marking 9116Bxx:	II (1) G [Ex ia Ga] IIC/IIB/IIA II 3 G Ex nA nC IIC T4 Gc II (1) D [Ex ia Da] IIIC I (M1) [Ex ia Ma] I
Marking 9116Axx:	II 3G Ex nA nC IIC T4 Gc
Standards	EN 60079-0:2012, EN 60079-11:2012, EN 60079-15:2010

9116Bxx Installation:

Hazardous area
Zone 0,1,2, 20, 21, 22

Non Hazardous area
or Zone 2

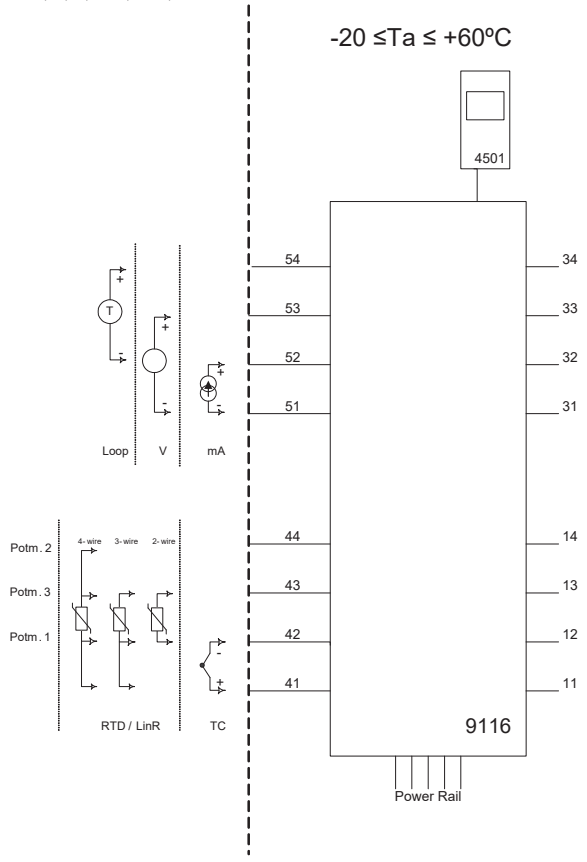

Supply terminal (31,32)
Voltage: 19.2 – 31.2 VDC

Status relay, terminal (33,34)

Zone 2 installation:

Voltage max:	32 VAC/ 32 VDC
Power max:	16 VA / 32 W
Current max:	0.5 A AC / 1 A DC

Relay output, terminal (13,14)

Zone 2 installation

Voltage max:	32 V AC / 30 VDC
Power max:	64 VA / 60 W
Current max:	2 A AC / 2 ADC

(terminal 11,12,13,14)
(terminal 31,32,33,34)
(terminal 91,92,93,94,95)
U_m: 253 V max. 400 Hz

Module 9116B1	
Terminal 51-52, 51-53	
Ui	30 V
Ii	120 mA
Pi	900 mW
Ci	3 nF
Li	1 µH

Module 9116B2	
Terminal 51-52, 51-53	
Ui	30 V
Ii	120 mA
Pi	900 mW
Ci	3 nF
Li	1 µH

Module 9116B1 Terminal 51-54, 52-54		Group	Co	Lo	Lo/Ro
Uo	28 V	IIC	80 nF	4 mH	54 µH/Ω
Io	93 mA	IIB	640 nF	16 mH	218 µH/Ω
Po	650 mW	IIA	2.1 µF	32 mH	436 µH/Ω

Module 9116B2 Terminal 51-54, 52-54		Group	Co	Lo	Lo/Ro
Uo	21.4 V	IIC	0.16 µF	4 mH	54 µH/Ω
Io	93 mA	IIB	1.13 µF	16 mH	218 µH/Ω
Po	650 mW	IIA	4.15 µF	32 mH	436 µH/Ω

Module 9116B1 Terminal 51-53		Group	Co	Lo	Lo/Ro
Uo	28 V	IIC	80 nF	1000 mH	4 mH/Ω
Io	1.1 mA	IIB	640 nF	1000 mH	17 mH/Ω
Po	8 mW	IIA	2.1 µF	1000 mH	35 mH/Ω

Module 9116B2 Terminal 51-53		Group	Co	Lo	Lo/Ro
Uo	21.4 V	IIC	0.16 µF	1000 mH	4 mH/Ω
Io	1.1 mA	IIB	1.13 µF	1000 mH	17 mH/Ω
Po	8 mW	IIA	4.15 µF	1000 mH	35 mH/Ω

Module 9116B1 Terminal 51-52		Group	Co	Lo	Lo/Ro
Uo	8.3 V	IIC	7 µF	1000 mH	100 mH/Ω
Io	0.2 mA	IIB	73 µF	1000 mH	400 mH/Ω
Po	0.4 mW	IIA	1000 µF	1000 mH	800 mH/Ω
Module 9116B1 Terminal 41,42,43,44		Group	Co	Lo	Lo/Ro
Uo	8.3 V	IIC	7 µF	207 mH	1 mH/Ω
Io	13.1 mA	IIB	73 µF	828 mH	5 mH/Ω
Po	27.3 mW	IIA	1000 µF	1000 mH	10 mH/Ω

Module 9116B2 Terminal 51-52		Group	Co	Lo	Lo/Ro
Uo	8.3 V	IIC	7 µF	1000 mH	100 mH/Ω
Io	0.2 mA	IIB	73 µF	1000 mH	400 mH/Ω
Po	0.4 mW	IIA	1000 µF	1000 mH	800 mH/Ω
Module 9116B2 Terminal 41,42,43,44		Group	Co	Lo	Lo/Ro
Uo	8.3 V	IIC	7 µF	207 mH	1 mH/Ω
Io	13.1 mA	IIB	73 µF	828 mH	5 mH/Ω
Po	27.3 mW	IIA	1000 µF	1000 mH	10 mH/Ω

Installation notes:

For group I (mines), the parameters for group IIA apply.

Install in pollution degree 2, overvoltage category II as defined in EN60664-1

Do not separate connectors when energized and an explosive gas mixture is present.
Do not mount or remove modules from the Power Rail when an explosive gas mixture is present.
Disconnect power before servicing.
The wiring of unused terminals is not allowed.

In type of protection [Ex ia Da] the parameters for intrinsic safety for gas group IIB are applicable.

For installation in Zone 2, the module shall be installed in an enclosure in type of protection Ex n or Ex e, providing a degree of protection of at least IP54. Cable entry devices and blanking elements shall fulfill the same requirements.

For installation on Power Rail in Zone 2, only Power Rail type 9400 supplied by Power Control Unit type 9410 (Type Examination Certificate KEMA 07ATEX0152 X) is allowed.

LERBAKKEN 10, 8410 RØNDE DENMARK

9116Bxx Installation:

Hazardous area
Zone 0,1,2, 20, 21, 22

Non Hazardous area
or Zone 2

-20 ºC ≤Ta ≤ +60ºC

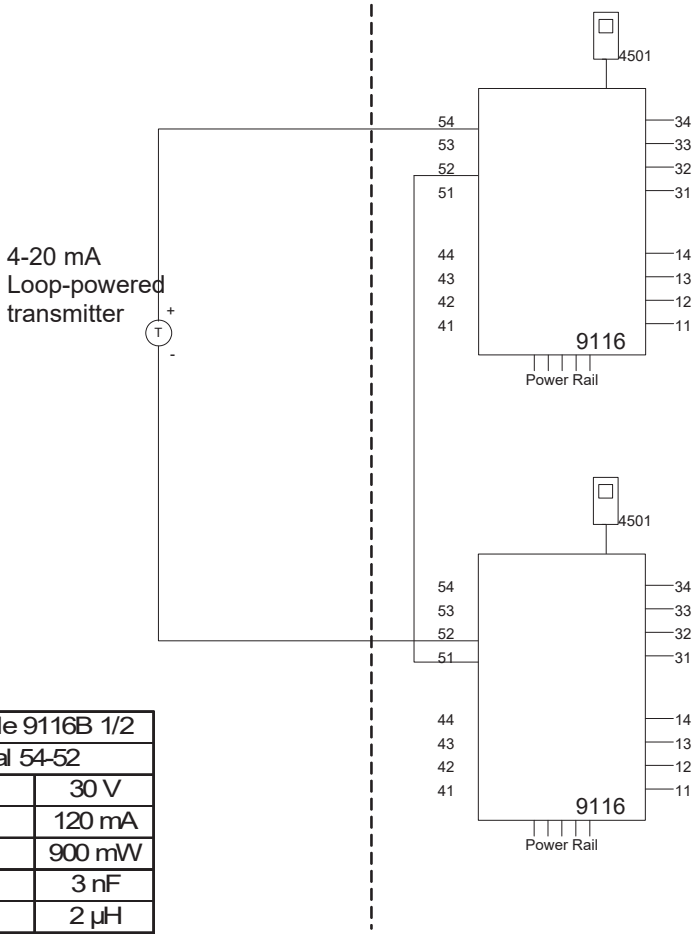

Supply terminal (31,32)
Voltage: 19.2 – 31.2 VDC

Status relay, terminal (33,34)

Zone 2 installation:
Voltage max: 32 VAC/ 32 VDC
Power max: 16 VA / 32 W
Current max: 0.5 A AC / 1 A DC

Relay output, terminal (13,14)

Zone 2 installation
Voltage max: 32 V AC / 30 VDC
Power max: 64 VA / 60 W
Current max: 2 A AC / 2 ADC

(terminal 11,12,13,14)
(terminal 31,32,33,34)
(terminal 91,92,93,94,95)
U_m: 253 V max. 400 Hz

Module 9116B 1/2	
Terminal 54-52	
Ui	30 V
Ii	120 mA
Pi	900 mW
Ci	3 nF
Li	2 µH

Module 9116B1 Term. 54-52; 51-52		Group	Co	Lo	Lo/Ro
Uo	28 V	IIC	80 nF	4 mH	54 µH/Ω
Io	93 mA	IIB	640 nF	16 mH	218 µH/Ω
Po	650 mW	IIA	2.1 µF	32 mH	436 µH/Ω

Module 9116B2 Term. 54-52; 51-52		Group	Co	Lo	Lo/Ro
Uo	21.4 V	IIC	0.16 µF	4 mH	54 µH/Ω
Io	93 mA	IIB	1.13 µF	16 mH	218 µH/Ω
Po	650 mW	IIA	4.15 µF	32 mH	436 µH/Ω

LERBAKKEN 10, 8410 RØNDE DENMARK

9116Bxx Installation:

Hazardous area
Zone 0,1,2, 20, 21, 22

Non Hazardous area
or Zone 2

-20 ºC ≤Ta ≤ +60ºC

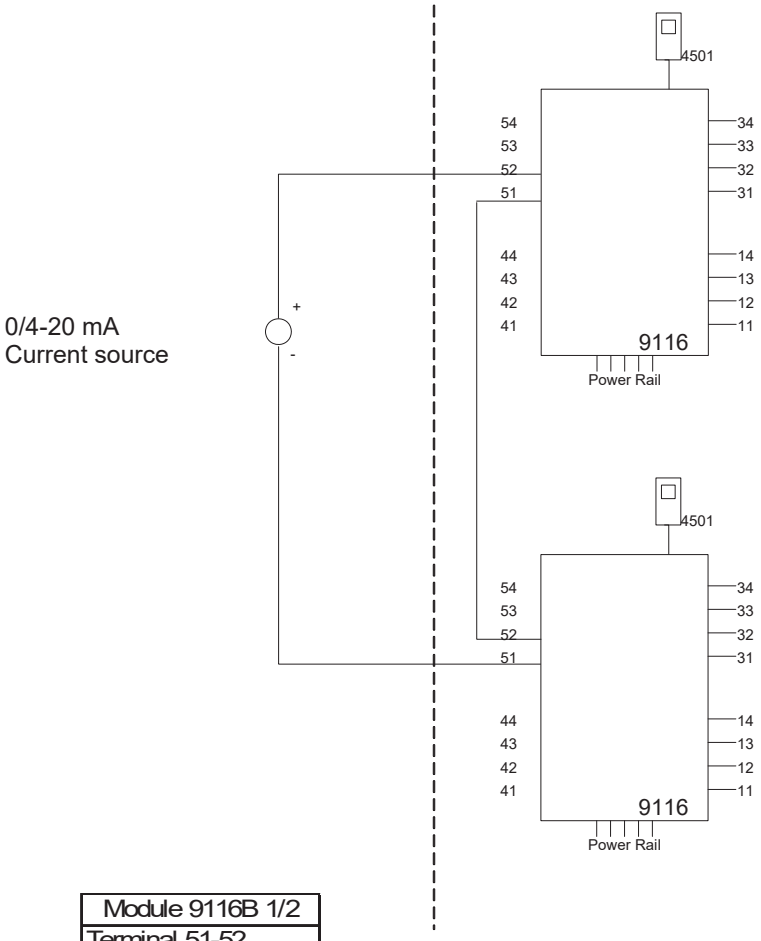

Supply terminal (31,32)
Voltage: 19.2 – 31.2 VDC

Status relay, terminal (33,34)
Zone 2 installation:
Voltage max: 32 VAC/ 32 VDC
Power max: 16 VA / 32 W
Current max: 0.5 A AC / 1 A DC

Relay output, terminal (13,14)
Zone 2 installation
Voltage max: 32 V AC / 30 VDC
Power max: 64 VA / 60 W
Current max: 2 A AC / 2 ADC

(terminal 11,12,13,14)
(terminal 31,32,33,34)
(terminal 91,92,93,94,95)
$U_{m:}$ 253 V max. 400 Hz

Module 9116B 1/2	
Terminal 51-52	
Ui	30 V
Ii	120 mA
Pi	900 mW
Ci	3 nF
Li	2 µH

Module 9116B 1/2 Term. 52-51, 51-52		Group	Co	Lo	Lo/Ro
Uo	16.6 V	IIC	0.4 µF	100 mH	25mH/Ω
Io	0.2 mA	IIB	2.3 µF	100 mH	100mH/Ω
Po	0.8 mW	IIA	9.5 µF	100 mH	200mH/Ω

LERBAKKEN 10, 8410 RØNDE DENMARK

9116Axx Installation:

Non Hazardous area or Zone 2

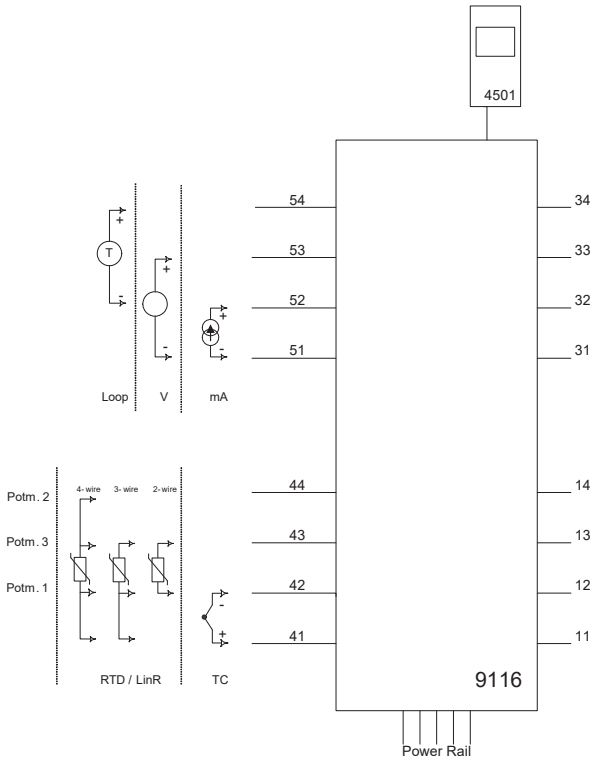

Supply terminal (31,32)
Voltage: 19.2 – 31.2 VDC

Status relay, terminal (33,34)
Zone 2 installation:
Voltage max: 32 VAC/ 32 VDC
Power max: 16 VA / 32 W
Current max: 0.5 A AC / 1 A DC

Relay output, terminal (13,14)
Zone 2 installation
Voltage max: 32 V AC / 30 VDC
Power max: 64 VA / 60 W
Current max: 2 A AC / 2 ADC

For installation in Zone 2, the module shall be installed in an enclosure in type of protection Ex n or Ex e, providing a degree of protection of at least IP54. Cable entry devices and blanking elements shall fulfill the same requirements.

For installation on Power Rail in Zone 2, only Power Rail type 9400 supplied by Power Control Unit type 9410 (Type Examination Certificate KEMA 07ATEX0152 X) is allowed.

The 4501 programming module is to be used solely with PR electronics' modules. It is important that the module is undamaged and has not been altered or modified in any way.
Only 4501 modules free of dust and moisture shall be installed.

LERBAKKEN 10, 8410 ROENDE DENMARK

FM Installation drawing

9116

For safe installation of 9116B the following must be observed. The module shall only be installed by qualified personnel who are familiar with the national and international laws, directives and standards that apply to this area.
Year of manufacture can be taken from the first two digits in the serial number.

4501
For Installation in Zone 2 / Division 2 the following must be observed.
The 4501 programming module is to be used solely with PR electronics modules. It is important that the module is undamaged and has not been altered or modified in any way. Only 4501 modules free of dust and moisture shall be installed.

c-FM-us Certificate …….. 3038267

Hazardous Classified Location

Class I/II/III, Division 1, Group A,B,C,D,E,F,G
or Class I, Zone 0/1 Group IIC, [AEx ia] IIC
or Class I, Zone 0/1 Group IIC, [Ex ia] IIC

Unclassified Location or Hazardous Classified Location
Class I, Division 2 Group A,B,C,D T4
or Class I, Zone 2, Group IIC T4

Simple Apparatus or Intrinsic safe apparatus with entity parameters:

Vmax (Ui) ≥ Vt (Uo)
Imax (Ii) ≥ It (Io)
Pi ≥ Pt (Po)
Ca ≥ Ccable + Ci
La ≥ Lcable + Li

-20 ≤Ta ≤ +60ºC

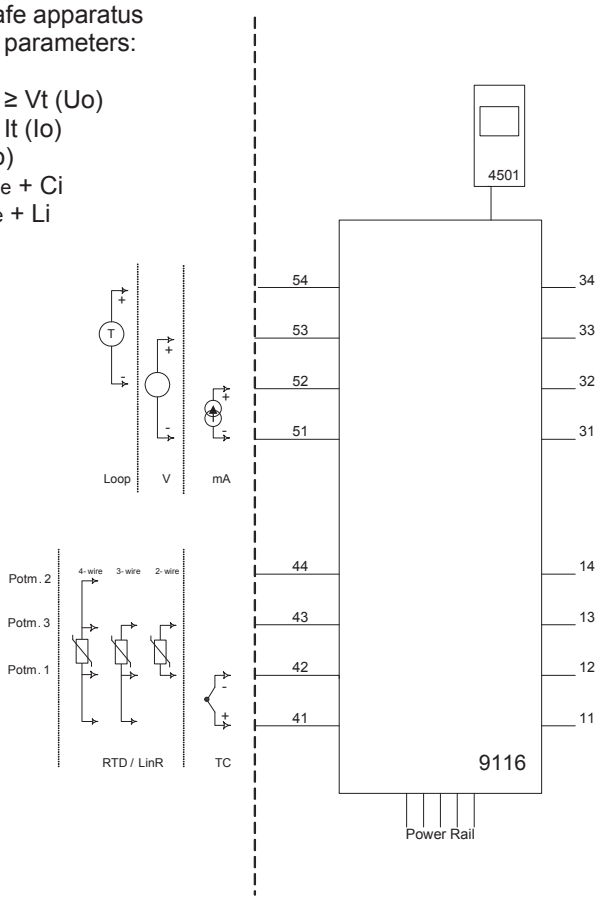

Status relay, terminal (33,34)

Non hazardous area installation
Voltage max: 125 VAC / 110 VDC
Power max: 62.5 VA / 32 W
Current max: 0.5 A AC / 0.3 ADC

Zone 2 installation:
Voltage max: 32 VAC/ 32 VDC
Power max: 16 VA / 32 W
Current max: 0.5 A AC / 1 A DC

Relay output, terminal (13,14)

Non hazardous area installation
Voltage max: 250 VAC / 30 VDC
Power max: 500 VA / 60 W
Current max: 2 A AC / 2 ADC

Zone 2 installation
Voltage max: 32 VAC / 30 VDC
Power max: 64 VA / 60 W
Current max: 2 A AC / 2 ADC

(terminal 11,12,13,14)
(terminal 31,32,33,34)
(terminal 91,92,93,94,95)
$U_{m:}$ 253 V max. 400 Hz

LERBAKKEN 10, 8410 ROENDE DENMARK

Module 9116B1	
Terminal 51-52, 51-53	
Ui, Vmax	30 V
Ii, Imax	120 mA
Pi	900 mW
Ci	3 nF
Li	1 µH

Module 9116B2	
Terminal 51-52, 51-53	
Ui, Vmax	30 V
Ii, Imax	120 mA
Pi	900 mW
Ci	3 nF
Li	1 µH

Module 9116B1 Terminal 51-54, 52-54		Group	Co	Lo	Lo/Ro
Uo, Voc	28 V	IIC or A,B	80 nF	4 mH	54 µH/Ω
Io, Isc	93 mA	IIB or C,E,F	640 nF	16 mH	218 µH/Ω
Po	650 mW	IIA or D,G	2.1 µF	32 mH	436 µH/Ω

Module 9116B2 Terminal 51-54, 52-54		Group	Co	Lo	Lo/Ro
Uo, Voc	21.4 V	IIC or A,B	0.16 µF	4 mH	54 µH/Ω
Io, Isc	93 mA	IIB or C,E,F	1.13 µF	16 mH	218 µH/Ω
Po	650 mW	IIA or D,G	4.15 µF	32 mH	436 µH/Ω

Module 9116B1 Terminal 51-53		Group	Co	Lo	Lo/Ro
Uo, Voc	28 V	IIC or A,B	80 nF	1000 mH	4 mH/Ω
Io, Isc	1.1 mA	IIB or C,E,F	640 nF	1000 mH	17 mH/Ω
Po	8 mW	IIA or D,G	2.1 µF	1000 mH	35 mH/Ω

Module 9116B2 Terminal 51-53		Group	Co	Lo	Lo/Ro
Uo, Voc	21.4 V	IIC or A,B	0.16 µF	1000 mH	4 mH/Ω
Io, Isc	1.1 mA	IIB or C,E,F	1.13 µF	1000 mH	17 mH/Ω
Po	8 mW	IIA or D,G	4.15 µF	1000 mH	35 mH/Ω

Module 9116B1 Terminal 51-52		Group	Co	Lo	Lo/Ro
Uo, Voc	8.3 V	IIC or A,B	7 µF	1000 mH	100 mH/Ω
Io, Isc	0.2 mA	IIB or C,E,F	73 µF	1000 mH	400 mH/Ω
Po	0.4 mW	IIA or D,G	1000 µF	1000 mH	800 mH/Ω
Module 9116B1 Terminal 41,42,43,44		Group	Co	Lo	Lo/Ro
Uo, Voc	8.3 V	IIC or A,B	7 µF	207 mH	1 mH/Ω
Io, Isc	13.1 mA	IIB or C,E,F	73 µF	828 mH	5 mH/Ω
Po	27.3 mW	IIA or D,G	1000 µF	1000 mH	10 mH/Ω

Module 9116B2 Terminal 51-52		Group	Co	Lo	Lo/Ro
Uo, Voc	8.3 V	IIC or A,B	7 µF	1000 mH	100 mH/Ω
Io, Isc	0.2 mA	IIB or C,E,F	73 µF	1000 mH	400 mH/Ω
Po	0.4 mW	IIA or D,G	1000 µF	1000 mH	800 mH/Ω
Module 9116B2 Terminal 41,42,43,44		Group	Co	Lo	Lo/Ro
Uo, Voc	8.3 V	IIC or A,B	7 µF	207 mH	1 mH/Ω
Io, Isc	13.1 mA	IIB or C,E,F	73 µF	828 mH	5 mH/Ω
Po	27.3 mW	IIA or D,G	1000 µF	1000 mH	10 mH/Ω

Installation notes:

The installation and wiring shall be in accordance with the Canadian Electrical Code for Canada and National Electrical Code NFPA 70, Article 500 or 505 for installation in USA.
The module must be supplied from a Power Supply having double or reinforced insulation.
The use of stranded wires is not permitted for mains wiring except when wires are fitted with cable ends.
For installation on the 9400 Power Rail the power must be supplied from Power Control Module Unit 9410.
Install in pollution degree 2 or better, overvoltage category I or II.
The module must be installed in an enclosure suitable for the environment for which it is used.
In Class I, Division 2 /Zone 2 installations, the subject equipment shall be mounted within a tool-secured enclosure which is capable of accepting one or more of the Class I, Division 2 wiring methods specified in the National Electrical Code for USA or the Canadian Electrical Code for Canada
The module is galvanic isolated and does not require grounding.
Use 60 / 75 ºC Copper Conductors with wire Size AWG: (26-14).
Warning: Substitution of components may impair intrinsic safety.
Warning: To prevent ignition of the explosive atmospheres, disconnect power before servicing and do not separate connectors when energized and an explosive gas mixture is present.
Warning: Do not mount or remove modules from the Power Rail when an explosive gas mixture is present.

LERBAKKEN 10, 8410 ROENDE DENMARK

Hazardous Classified Location
Class I/II/III, Division 1, Group A,B,C,D,E,F,G
or Class I, Zone 0/1 Group IIC, [AEx ia] IIC
or Class I, Zone 0/1 Group IIC, [Ex ia] IIC

Unclassified Location or
Hazardous Classified Location
Class I, Division 2 Group A,B,C,D T4
or Class I, Zone 2, Group IIC T4

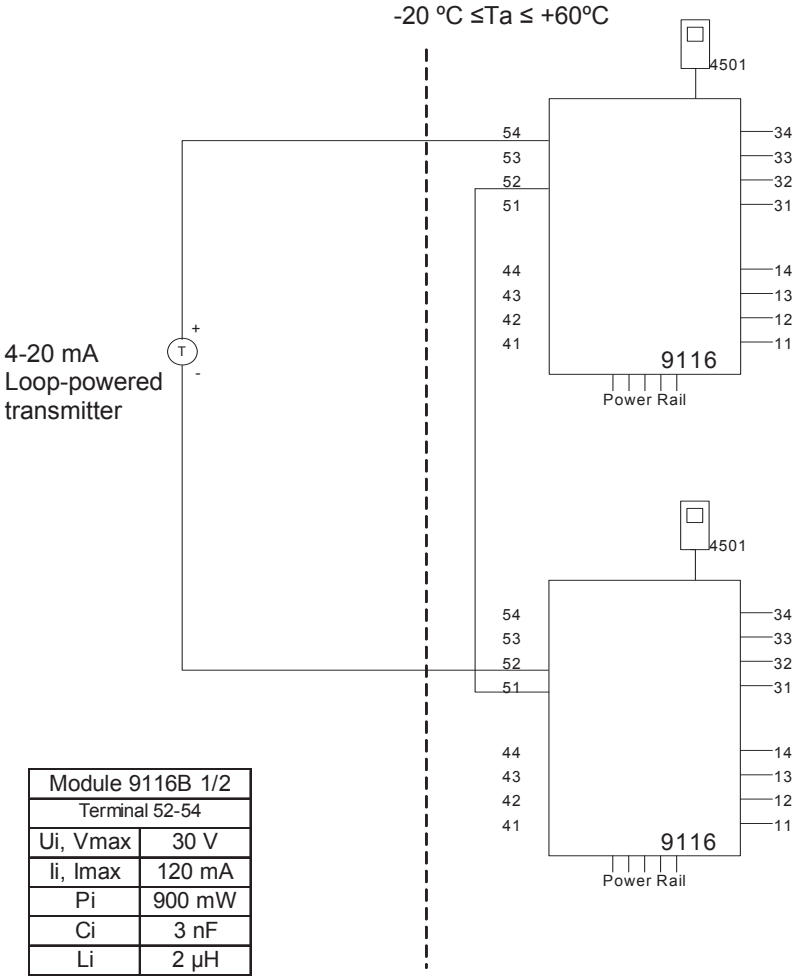

Status relay, terminal (33,34)

Non hazardous area installation
Voltage max: 125 VAC / 110 VDC
Power max: 62.5 VA / 32 W
Current max: 0.5 A AC / 0.3 ADC

Zone 2 installation:
Voltage max: 32 VAC / 32 VDC
Power max: 16 VA / 32 W
Current max: 0.5 A AC / 1 A DC

Relay output, terminal (13,14)

Non hazardous area installation
Voltage max: 250 VAC / 30 VDC
Power max: 500 VA / 60 W
Current max: 2 A AC / 2 ADC

Zone 2 installation
Voltage max: 32 VAC / 30 VDC
Power max: 64 VA / 60 W
Current max: 2 A AC / 2 ADC

Module 9116B 1/2 Terminal 52-54	
Ui, Vmax	30 V
Ii, Imax	120 mA
Pi	900 mW
Ci	3 nF
Li	2 µH

Module 9116B1 Terminals 52-54		Group	Co	Lo	Lo/Ro
Uo, Voc	28 V	IIC or A,B	80 nF	4 mH	54 µH/Ω
Io, Isc	93 mA	IIB or C,E,F	640 nF	16 mH	218 µH/Ω
Po	650 mW	IIA or D,G	2.1 µF	32 mH	436 µH/Ω

Module 9116B2 Terminal 52-54		Group	Co	Lo	Lo/Ro
Uo, Voc	21.4 V	IIC or A,B	0.16 µF	4 mH	54 µH/Ω
Io, Isc	93 mA	IIB or C,E,F	1.13 µF	16 mH	218 µH/Ω
Po	650 mW	IIA or D,G	4.15 µF	32 mH	436 µH/Ω

(terminal 11,12,13,14)
(terminal 31,32,33,34)
(terminal 91,92,93,94,95)
U_m: 253 V max. 400 Hz

LERBAKKEN 10, 8410 ROENDE DENMARK

Hazardous Classified Location
Class I/II/III, Division 1, Group A,B,C,D,E,F,G
or Class I, Zone 0/1 Group IIC, [AEx ia] IIC
or Class I, Zone 0/1 Group IIC, [Ex ia] IIC

Unclassified Location or
Hazardous Classified Location
Class I, Division 2 Group A,B,C,D T4
or Class I, Zone 2, Group IIC T4

-20 ºC ≤Ta ≤ +60ºC

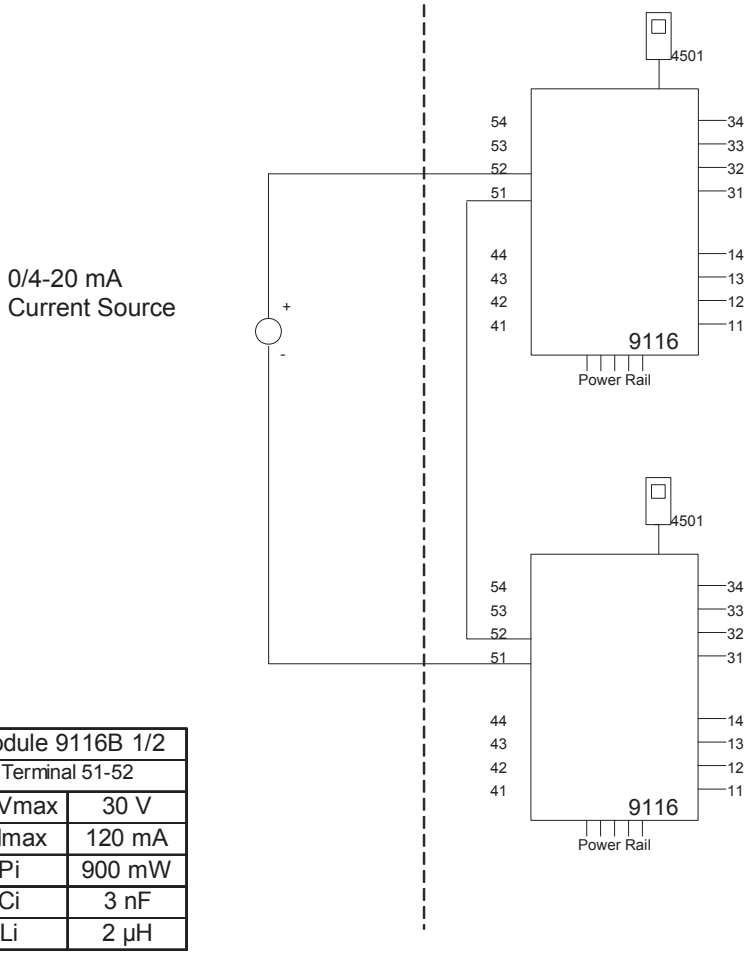

Module 9116B 1/2	
Terminal 51-52	
Ui, Vmax	30 V
Ii, Imax	120 mA
Pi	900 mW
Ci	3 nF
Li	2 µH

Status relay, terminal (33,34)

Unclassified location installation:
Voltage max: 125 VAC / 110 VDC
Power max: 62.5 VA / 32 W
Current max: 0.5 A AC / 0.3 ADC

Zone 2 installation:
Voltage max: 32 VAC/ 32 VDC
Power max: 16 VA / 32 W
Current max: 0.5 A AC / 1 A DC

Relay output, terminal (13,14)

Unclassified location installation:
Voltage max: 250 VAC / 30 VDC
Power max: 500 VA / 60 W
Current max: 2 A AC / 2 ADC

Zone 2 installation
Voltage max: 32 VAC / 30 VDC
Power max: 64 VA / 60 W
Current max: 2 A AC / 2 ADC

(terminal 11,12,13,14)
(terminal 31,32,33,34)
(terminal 91,92,93,94,95)
U_m: 253 V max. 400 Hz

Module 9116B 1/2 Terminals 51-52		Group	Co	Lo	Lo/Ro
Uo, Voc	16.6 V	IIC or A,B	0.4 µF	100 mH	25mH/Ω
Io, Isc	0.2 mA	IIB or C,E,F	2.3 µF	100 mH	100mH/Ω
Po	0.8 mW	IIA or D,G	9.5 µF	100 mH	200mH/Ω

LERBAKKEN 10, 8410 RØNDE DENMARK

INMETRO Desenhos para Instalação

Para instalação segura do 9116B o manual seguinte deve ser observado. O módulo deve ser instalado somente por profissionais qualificados que estão familiarizados com as leis nacionais e internacionais, diretrizes e normas que se aplicam a esta área.
Ano de fabricação pode ser obtido a partir dos dois primeiros dígitos do número de série

Para a instalação na Zona 2 o seguinte deve ser observado. O módulo de programação de 4501, deve ser utilizado apenas com os módulos PRelectronics. É importante que o módulo esteja intacto e não tenha sido alterado ou modificado de qualquer maneira. Apenas os módulos 4501 livres de poeira e umidade devem ser instalados.

INMETRO Certificado ..... DEKRA 16.0004X

Marcasão:

[Ex ia Ga] IIC/IIB/IIA
Ex nA nC IIC T4 Gc
[Ex ia Da] IIIC
[Ex ia Ma] I

Normas: ABNT NBR IEC60079-0:2013, ABNT NBR IEC60079-11:2013, ABNT NBR IEC60079-15:2012

Área de classificada
Zona 0, 1, 2, 20, 21 e 22

Área de não classificada
ou Zona 2

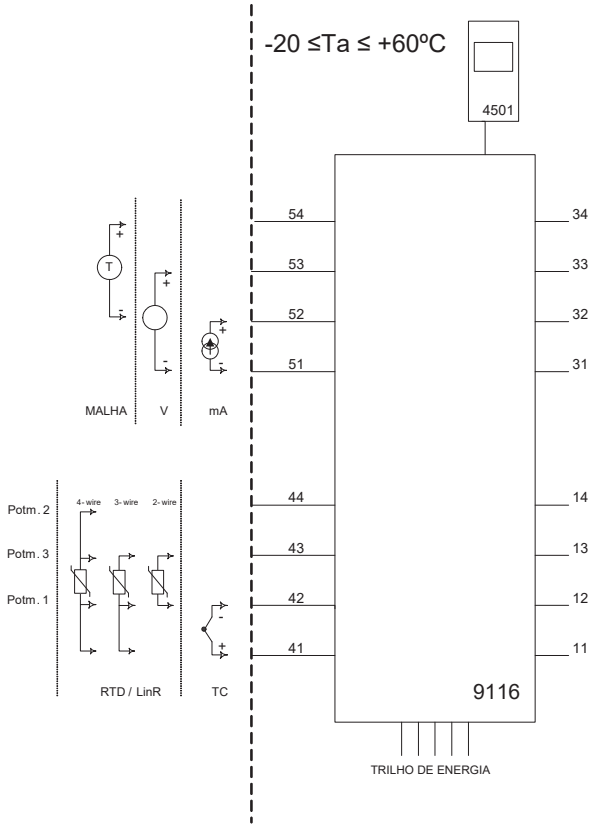

Relê de estado, terminais (33,34)

Instalação em área não classificada:
Voltagem máx.: 125 VAC / 110 VDC
Power máx.: 62,5 VA / 32 W
Corrente máx.: 0,5 A AC / 0,3 ADC

Instalação em Zona 2:
Voltagem máx.: 32 VAC/ 32 VDC
Potência máx.: 16 VA / 32 W

Rele de estado, terminais (13,14)

Instalação em área não classificada:
Voltagem máx.: 250 VAC / 30 VDC
Potência máx.: 500 VA / 60 W
Corrente máx.: 2 A AC / 2 ADC

Instalação em Zona 2:
Voltagem máx.: 32 VAC / 30 VDC
Potência máx.: 64 VA / 60 W
Corrente máx.:: 2 A AC / 2 ADC

(terminais 11,12,13,14)
(terminais 31,32,33,34)
(terminais 91,92,93,94,95)
U_m: 253 V; máx. 400 Hz

LERBAKKEN 10, 8410 RØNDE DENMARK

Module 9116B1	
Terminal 51-52, 51-53	
Ui	30 V
Ii	120 mA
Pi	900 mW
Ci	3 nF
Li	1 µH

Module 9116B2	
Terminal 51-52, 51-53	
Ui	30 V
Ii	120 mA
Pi	900 mW
Ci	3 nF
Li	1 µH

Module 9116B1 Terminal 51-54, 52-54		Group	Co	Lo	Lo/Ro
Uo	28 V	IIC	80 nF	4 mH	54 µH/Ω
Io	93 mA	IIB	640 nF	16 mH	218 µH/Ω
Po	650 mW	IIA	2.1 µF	32 mH	436 µH/Ω

Module 9116B2 Terminal 51-54, 52-54		Group	Co	Lo	Lo/Ro
Uo	21.4 V	IIC	0.16 µF	4 mH	54 µH/Ω
Io	93 mA	IIB	1.13 µF	16 mH	218 µH/Ω
Po	650 mW	IIA	4.15 µF	32 mH	436 µH/Ω

Module 9116B1 Terminal 51-53		Group	Co	Lo	Lo/Ro
Uo	28 V	IIC	80 nF	1000 mH	4 mH/Ω
Io	1.1 mA	IIB	640 nF	1000 mH	17 mH/Ω
Po	8 mW	IIA	2.1 µF	1000 mH	35 mH/Ω

Module 9116B2 Terminal 51-53		Group	Co	Lo	Lo/Ro
Uo	21.4 V	IIC	0.16 µF	1000 mH	4 mH/Ω
Io	1.1 mA	IIB	1.13 µF	1000 mH	17 mH/Ω
Po	8 mW	IIA	4.15 µF	1000 mH	35 mH/Ω

Module 9116B1 Terminal 51-52		Group	Co	Lo	Lo/Ro
Uo	8.3 V	IIC	7 µF	1000 mH	100 mH/Ω
Io	0.2 mA	IIB	73 µF	1000 mH	400 mH/Ω
Po	0.4 mW	IIA	1000 µF	1000 mH	800 mH/Ω
Module 9116B1 Terminal 41,42,43,44		Group	Co	Lo	Lo/Ro
Uo	8.3 V	IIC	7 µF	207 mH	1 mH/Ω
Io	13.1 mA	IIB	73 µF	828 mH	5 mH/Ω
Po	27.3 mW	IIA	1000 µF	1000 mH	10 mH/Ω

Module 9116B2 Terminal 51-52		Group	Co	Lo	Lo/Ro
Uo	8.3 V	IIC	7 µF	1000 mH	100 mH/Ω
Io	0.2 mA	IIB	73 µF	1000 mH	400 mH/Ω
Po	0.4 mW	IIA	1000 µF	1000 mH	800 mH/Ω
Module 9116B2 Terminal 41,42,43,44		Group	Co	Lo	Lo/Ro
Uo	8.3 V	IIC	7 µF	207 mH	1 mH/Ω
Io	13.1 mA	IIB	73 µF	828 mH	5 mH/Ω
Po	27.3 mW	IIA	1000 µF	1000 mH	10 mH/Ω

Notas de instalação:

Para o grupo I (minas), aplicam-se os parâmetros do grupo IIA.

Instalação em grau de poluição 2, categoria de sobretensão II conforme definido no IEC 60664-1.
Os circuitos não intrinsecamente seguros só pode ser connectado para sobretensão limitado ao categoria I/II como definido na IEC 60664-1.
Não separe conectores quando energizado ou quando uma mistura de gás explosivo estiver presente.
Não monte ou remova módulos do trilho de alimentação quando uma mistura de gás explosivo estiver presente.
Desligue a alimentação antes da manutenção.
A fiação de terminais sem uso não é permitida.

Em tipo de proteção [Ex ia Da] os parâmetros para a segurança intrínseca para grupo de gás IIB são aplicáveis.
Para a instalação em Zona 2, o módulo deve ser instalado em um invólucro conformidade com o tipo de proteção ‘Ex n’ ou ‘Ex e’, fornecendo no mínimo grau de proteçao IP54.
Dispositivos de entrada de cabo e elementos de vedação devem cumprir com os mesmos requisitos.
Para a instalação de trilho de energia na Zona 2, apenas o trilho de alimentação Rail 9400 fornecido pela Unidade de Controle de Potência 9410 é permitido.

LERBAKKEN 10, 8410 RØNDE DENMARK

Área de classificada
Zona 0,1,2, 20, 21, 22

Área de não classificada
ou Zona 2

-20 ≤Ta ≤ +60ºC

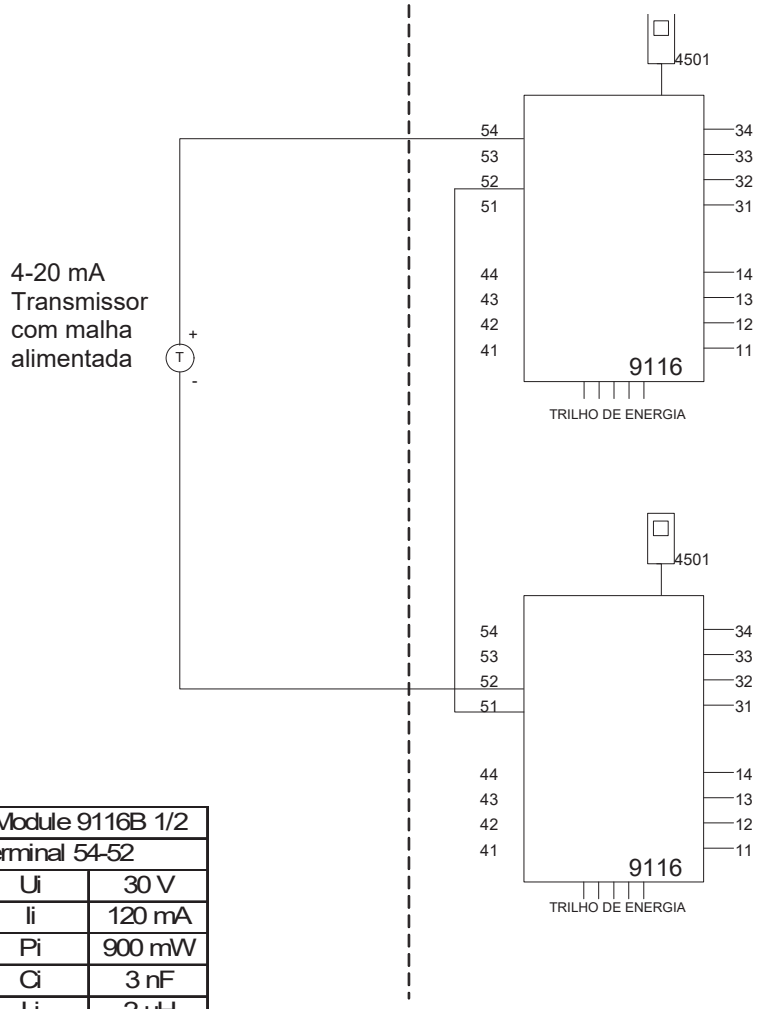

Rele de estado, terminais (33,34)

Instalação em área não classificada:
Voltagem máx.: 125 VAC / 110 VDC
Potência máx.: 62.5 VA / 32 W
Corrente máx.: 0,5 A AC / 0,3 ADC

Instalação em Zona 2:
Voltagem máx.: 32 VAC/ 32 VDC
Potência máx.: 16 VA / 32 W
Corrente máx.: 0,5 A AC / 1 A DC

Rele de estado, terminais (13,14)

Instalação em área não classificada:
Voltagem máx.: 250 VAC / 30 VDC
Potência máx.: 500 VA / 60 W
Corrente máx.: 2 A AC / 2 A DC

Instalação em Zona 2:
Voltagem máx.: 32 V AC / 30 VDC
Potência máx.: 64 VA / 60 W
Corrente máx.: 2 A AC / 2 ADC

(terminais 11,12,13,14)
(terminais 31,32,33,34)
(terminais 91,92,93,94,95)
U_m: 253 V máx. 400 Hz

Module 9116B 1/2	
Terminal 54-52	
Ui	30 V
Ii	120 mA
Pi	900 mW
Ci	3 nF
Li	2 µH

Module 9116B1 Term. 54-52; 51-52		Group	Co	Lo	Lo/Ro
Uo	28 V	IIC	80 nF	4 mH	54 µH/Ω
Io	93 mA	IIB	640 nF	16 mH	218 µH/Ω
Po	650 mW	IIA	2.1 µF	32 mH	436 µH/Ω

Module 9116B2 Term. 54-52; 51-52		Group	Co	Lo	Lo/Ro
Uo	21.4 V	IIC	0.16 µF	4 mH	54 µH/Ω
Io	93 mA	IIB	1.13 µF	16 mH	218 µH/Ω
Po	650 mW	IIA	4.15 µF	32 mH	436 µH/Ω

LERBAKKEN 10, 8410 RØNDE DENMARK

Área de classificada
Zona 0, 1, 2, 20, 21, 22

Área de não classificada
ou Zona 2

-20 ≤Ta ≤ +60ºC

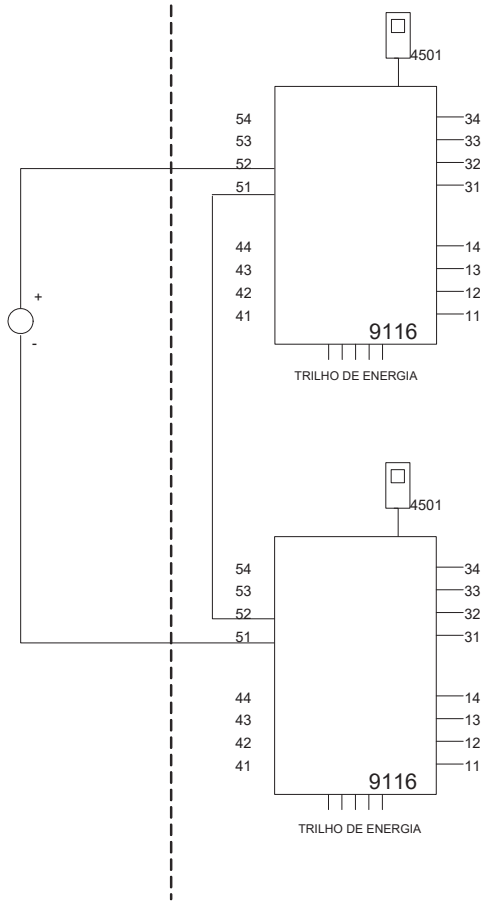

0/4-20 mA
Fonte de
Corrente

Rele de estado, terminais (33,34)

Instalação em área não classificada:
Voltagem máx.: 125 VAC / 110 VDC
Potência máx.: 62.5 VA / 32 W
Corrente máx;: 0,5 A AC / 0,3 ADC

Instalação em Zona 2:
Voltagem máx.: 32 VAC/ 32 VDC
Potência máx.: 16 VA / 32 W
Corrente máx.: 0,5 A AC / 1 A DC

Rele de estado, terminais (13,14)

Instalação em área não Classificada:
Voltagem máx.: 250 VAC / 30 VDC
Potência máx.: 500 VA / 60 W
Corrente máx.: 2 A AC / 2 ADC

Instalação em Zona 2:
Voltagem máx: 32 VAC / 30 VDC
Potência máx.: 64 VA / 60 W
Corrente máx.: 2 A AC / 2 ADC

(terminais 11,12,13,14)
(terminais 31,32,33,34)
(terminais 91,92,93,94,95)
U_m: 253 V máx. 400 Hz

Module 9116B 1/2	
Terminal 51-52	
Ui	30 V
Ii	120 mA
Pi	900 mW
Ci	3 nF
Li	2 µH

Module 9116B 1/2 Term. 52-51, 51-52		Group	Co	Lo	Lo/Ro
Uo	16.6 V	IIC	0.4 µF	100 mH	25mH/Ω
Io	0.2 mA	IIB	2.3 µF	100 mH	100mH/Ω
Po	0.8 mW	IIA	9.5 µF	100 mH	200mH/Ω

Document history

The following list provides notes concerning revisions of this document.

Rev. ID	Date	Notes
106	1722	Specifications for max. required power added New ATEX, IECEX and INMETRO certificates and installation drawings
107	1815	Relay data updated, graph with resistive loads inserted ATEX and IECEx installation drawings updated with new relay data

We are near you, *all over the world*

Our trusted red boxes are supported wherever you are

All our devices are backed by expert service and a 5-year warranty. With each product you purchase, you receive personal technical support and guidance, day-to-day delivery, repair without charge within the warranty period and easily accessible documentation.

We are headquartered in Denmark, and have offices and authorized partners the world over. We are a local business with a global reach. This means that we are always nearby and know your local markets well. We are committed to your satisfaction and provide PERFORMANCE MADE SMARTER all around the world.

For more information on our warranty program, or to meet with a sales representative in your region, visit prelectronics.com.

Benefit today from
PERFORMANCE MADE SMARTER

PR electronics is the leading technology company specialized in making industrial process control safer, more reliable and more efficient. Since 1974, we have been dedicated to perfecting our core competence of innovating high precision technology with low power consumption. This dedication continues to set new standards for products communicating, monitoring and connecting our customers' process measurement points to their process control systems.

Our innovative, patented technologies are derived from our extensive R&D facilities and from having a great understanding of our customers' needs and processes. We are guided by principles of simplicity, focus, courage and excellence, enabling some of the world's greatest companies to achieve PERFORMANCE MADE SMARTER.