# IM5024

## Inductive sensor

IME3020-FPKG/NPT RT

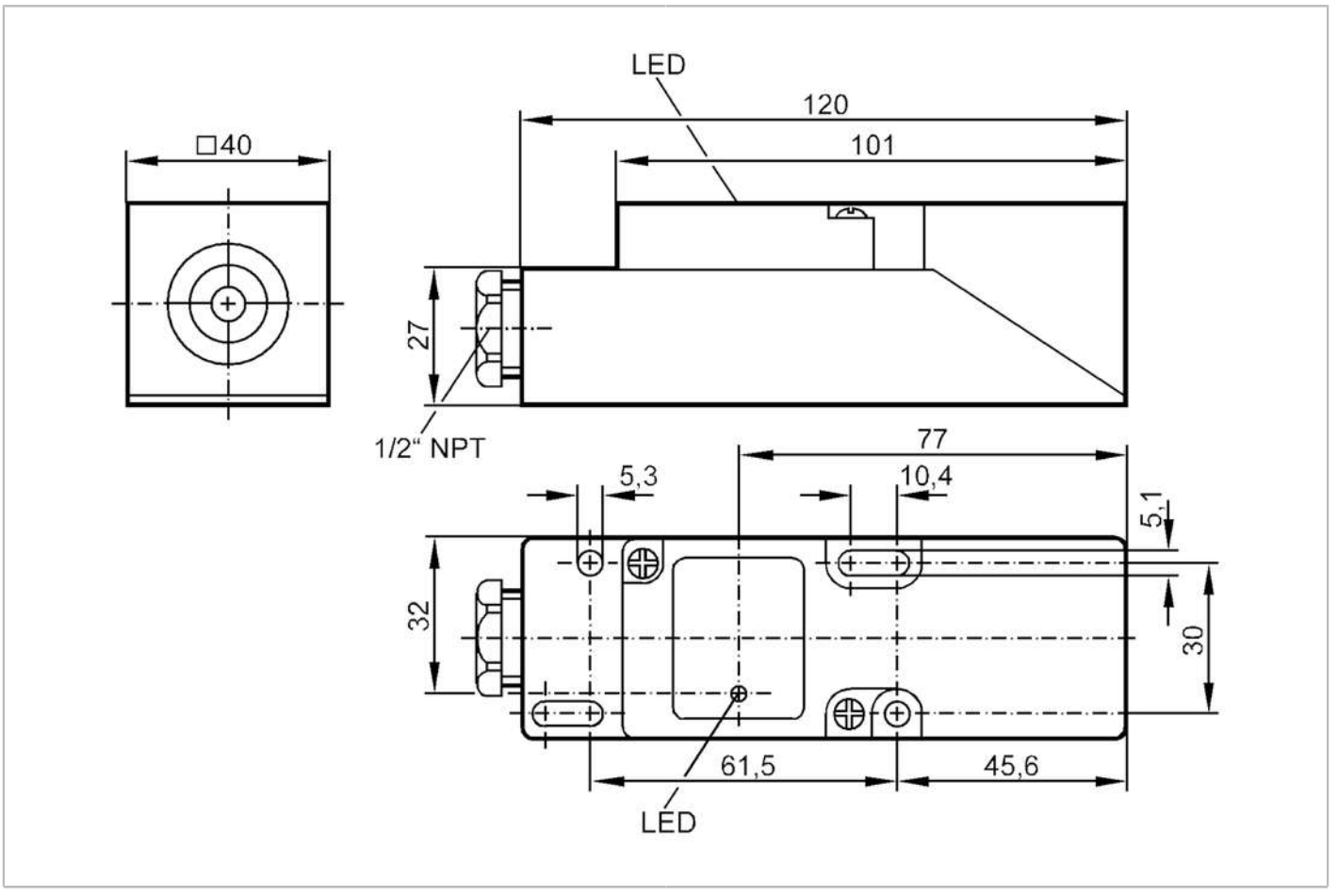


| | | |
|---|---|---|
| **Product characteristics** | | |
| Electrical design | | PNP |
| Output function | | normally open / normally closed; (selectable) |
| Sensing range | [mm] | 20 |
| Housing | | rectangular |
| Dimensions | [mm] | 40 x 40 x 120 |
| **Electrical data** | | |
| Operating voltage | [V] | 10...36 DC |
| Current consumption | [mA] | 15; (24 V) |
| Protection class | | II |
| Reverse polarity protection | | yes |
| **Outputs** | | |
| Electrical design | | PNP |
| Output function | | normally open / normally closed; (selectable) |
| Max. voltage drop switching output DC | [V] | 2.5 |
| Permanent current rating of switching output DC | [mA] | 250 |
| Switching frequency DC | [Hz] | 300 |

# IM5024

## Inductive sensor

IME3020-FPKG/NPT RT

| | | | |
|---|---|---|---|
| Short-circuit protection | | yes | |
| Type of short-circuit protection | | pulsed | |
| Overload protection | | yes | |
| **Detection zone** | | | |
| Sensing range | [mm] | 20 | |
| Real sensing range Sr | [mm] | 20 ± 10 % | |
| Operating distance | [mm] | 0...16.2 | |
| **Accuracy / deviations** | | | |
| Correction factor | | steel: 1 / stainless steel: 0.7 / brass: 0.4 / aluminium: 0.3 / copper: 0.2 | |
| Hysteresis | [% of Sr] | 1...15 | |
| Switch point drift | [% of Sr] | -10...10 | |
| **Operating conditions** | | | |
| Ambient temperature | [°C] | -25...80 | |
| Protection | | IP 65 | |
| **Tests / approvals** | | | |
| EMC | | EN 61000-4-2 ESD | 4 kV CD |
| | | EN 61000-4-3 HF radiated | 3 V/m |
| | | EN 61000-4-4 Burst | 2 kV |
| | | EN 61000-4-6 HF conducted | 3 V |
| | | EN 55011 | class B |
| MTTF | [years] | 1754 | |
| **Mechanical data** | | | |
| Weight | [g] | 191 | |
| Housing | | rectangular | |
| Mounting | | non-flush mountable | |
| Dimensions | [mm] | 40 x 40 x 120 | |
| Materials | | PPE | |
| **Displays / operating elements** | | | |
| Display | | switching status | 1 x LED, red |
| **Remarks** | | | |
| Remarks | | 5 positions of the active zone possible | |
| Pack quantity | | 1 pcs. | |

# IM5024

## Inductive sensor

**IME3020-FPKG/NPT** **RT**

## Electrical connection

terminals: ...2.5 mm²; Cable sheath: Ø 7...13 mm

### Connection

