EVF651

Y connection cable

YSDGHBC0VAS00,2PBCSTGHBC0VAS

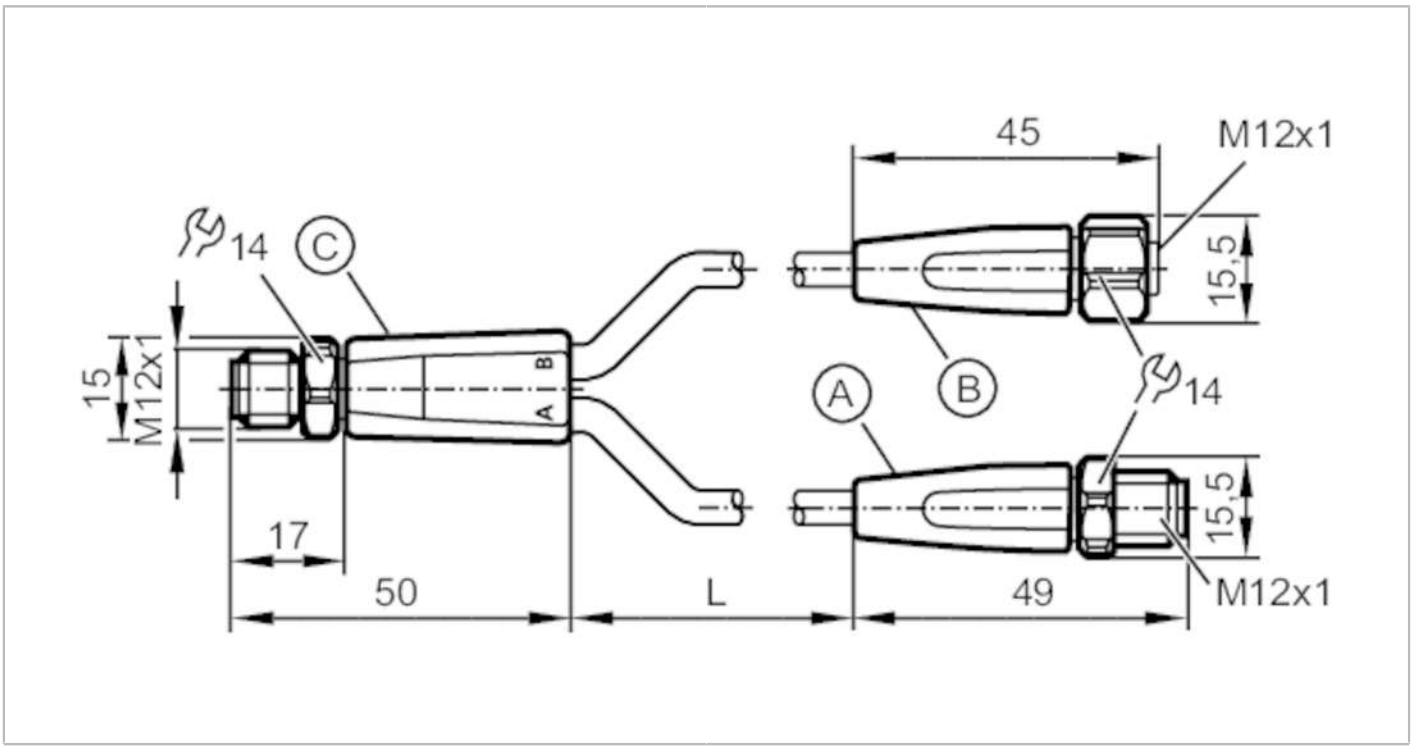

Application		
Special feature		Free from silicone; Halogen-free; Gold-plated contacts; Drag chain suitability
Application		hygienic and wet areas in the food industry
Free from silicone		yes
Electrical data		
Operating voltage	[V]	< 24 DC
Protection class		III
Max. current load total	[A]	4
Operating conditions		
Ambient temperature	[°C]	-25...100
Protection		IP 65; IP 67; IP 68; IP 69K
Mechanical data		
Weight	[g]	51.6
Moulded-body material		PP
Material nut		stainless steel (1.4404 / 316L)
Sealing material		EPDM
Number of ports splitter box		2
Drag chain suitability		yes
Drag chain suitability	bending radius for flexible use	min. 10 x cable diameter
	travel speed	max. 3.3 m/s for a horizontal travel length of 5 m and max. acceleration of 5 m/s²
	bending cycles	> 1 Mio.
	torsional strain	± 180 °/m

EVF651

Y connection cable

YSDGHBC0VAS00,2PBCSTGHBC0VAS

Remarks	
Pack quantity	1 pcs.

Electrical connection

Cable: 0.2 m, MPPE, Halogen-free, grey, Ø 4.9 mm; 3 x 0.34 mm² (42 x Ø 0.1 mm) + 4 x 0.34 mm² (42 x Ø 0.1 mm)

Electrical connection - plug C

Connector: 1 x M12, straight; coding: A; Moulded body: PP, grey; Locking: stainless steel (1.4404 / 316L); Contacts: gold-plated; Tightening torque: 0.6...1.2 Nm



Electrical connection - socket B

Connector: 1 x M12, straight; coding: A; Moulded body: PP, grey; Locking: stainless steel (1.4404 / 316L); Sealing: EPDM; Contacts: gold-plated; Tightening torque: 0.6...1.5 Nm

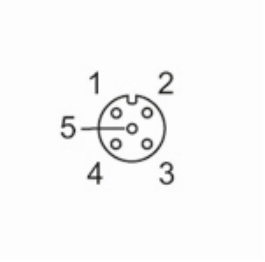

Electrical connection - plug A

Connector: 1 x M12, straight; coding: A; Moulded body: PP, grey; Locking: stainless steel (1.4404 / 316L); Contacts: gold-plated; Tightening torque: 0.6...1.2 Nm

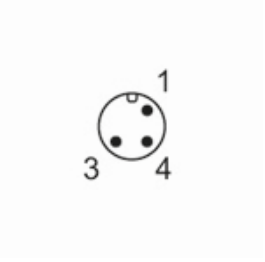

EVF651

Y connection cable

YSDGHBC0VAS00,2PBCSTGHBC0VAS

Electrical connection - Connection

Connection

