Pomona ELECTRONICS

Technical Data Sheet

# Models 6405 and 6413
## Insulation Piercing Clips



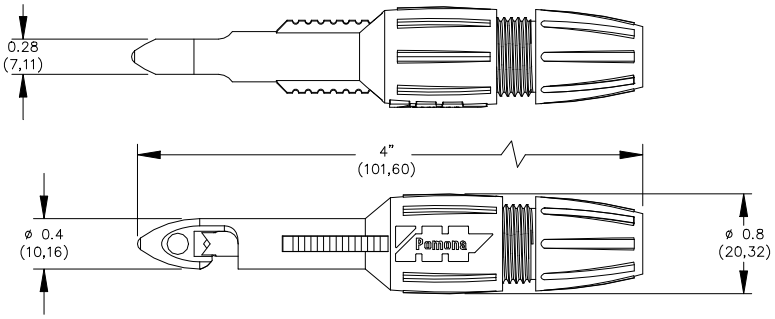


## Features

- Make contact with insulated wires without cutting or stripping insulation.
- Spring loaded double “V” clamp holds wire centered for piercing needle.
- Pierces insulation on wires from 22 to 14 AWG (0.030” through 0.180” diameter).
- Tiny hole left in insulation can easily be sealed.
- High visibility bright yellow body.
- 6405 mates with standard .16” (4mm) banana plug test leads, with or without safety shroud (e.g. 5907A or “B” series patch cords).
- 6413 mates with standard .080” (2mm) standard pin tip test probe (e.g. 5519A).
- Red or black color-coded cap for easy identification.
- Rotating banana jack will not twist test lead while the needle is screwed into wire.

## Materials

| | |
|---|---|
| Piercing Tip: | hardened stainless steel |
| Spring: | steel |
| Jack: | brass |
| Insulation (jack, body, tip): | nylon red or black caps with high visibility yellow nylon |

## Ratings

| | |
|---|---|
| Operating Voltage: | 33 Vrms or 70 Vdc Max. |
| Current: | 1 Amperes Max. |

## Ordering Information

Models:
**6405**, for banana plug connections, set includes two clips, one red and one black
**6413**, for pin tip connections, set includes two clips, one red and one black

**USA:** Sales: 800-490-2361
Technical Support: technicalsupport@pomonatest.com
Fax: 425-446-5844
**Europe:** 31-(0) 40 2675 150 **International:** 425-446-5500
**Where to Buy:** www.pomonaelectronics.com

All dimensions are in inches. Tolerances (except noted): .xx = ±.02” (,51 mm), .xxx = ± .005” (,127 mm). All specifications are to the latest revisions. Specifications are subject to change without notice. Registered trademarks are the property of their respective companies.

Copyright © 2010 