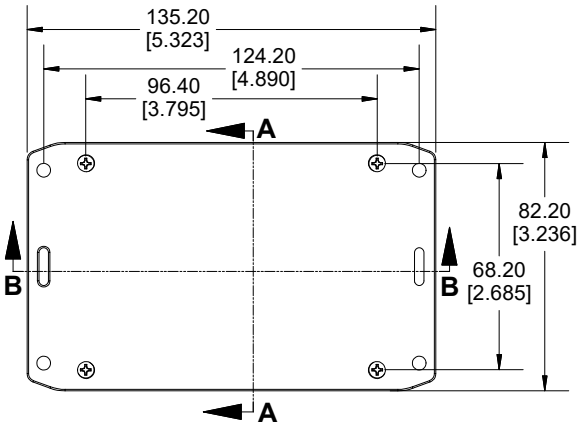

TOP VIEW

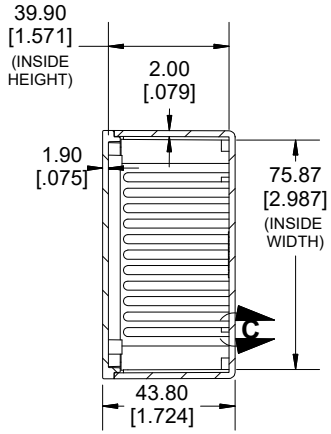

SECTION A-A

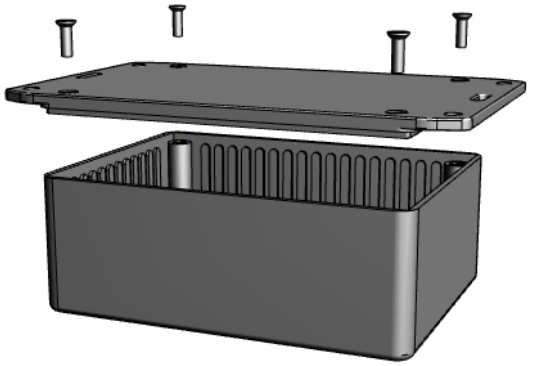

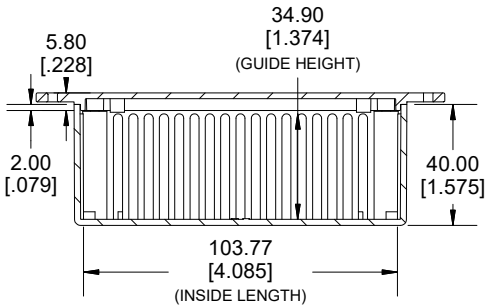

SECTION B-B
SIDE VIEW

DETAIL C

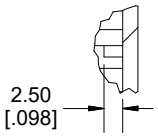

DETAIL D

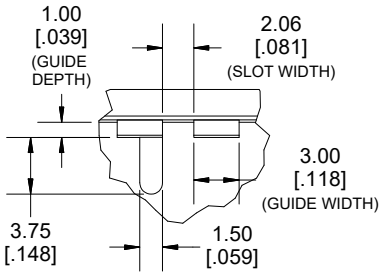

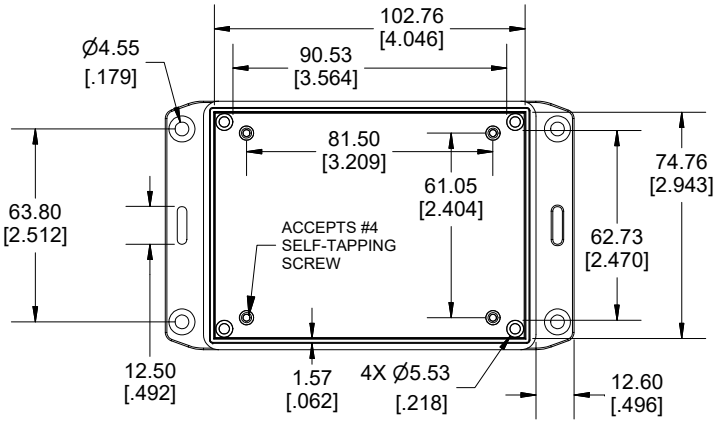

INSIDE LID

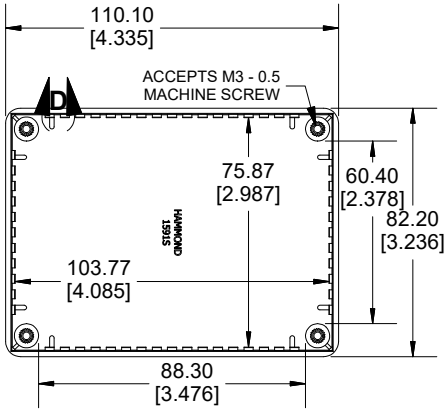

INSIDE BOX

Enclosures can be Factory Modified (Milling, Drilling, Printing etc.)
Contact Factory (modshop@hammfg.com) for quotes
Solid models of this enclosure available in .stp or .x_t
(Part number and text placement/orientation on our products are subject to change, we do not recommend using them as a locating reference for modification purposes)

NOTE
Purchased assembly includes box, lid, 4 cover screws, and pre-installed brass inserts.
Enclosure made from FRABS
Recommended Torque: 42-57 ozf.in (30-40 cN.m)

PART NUMBERS	
1591S Enclosure	
Flame Retardant ABS Black	1591SFLBK
Flame Retardant ABS Grey	1591SFLGY
Accessories	
Plated Cover screw M3 - 0.5 X 10mm (100Pkg)	1591MS100 (Silver)
	1591MS100BK (Black)
P.C Board screws for Lid #4 X 1/4" (6.4mm) Self-Tapping	1593ATS50 (50Pkg)
	1593ATS100 (100Pkg)
PC Board Card Adapters	1591Z6 (6Pkg)
	1591Z50 (50 Pkg)
	1591Z100 (100Pkg)
Nylon Belt / Pocket clip	1599CLIP (Black)
	1599CLIPGY (Grey)

Dimensions:
mm
[inches]

HAMMOND MANUFACTURING®

1591SFL

www.hammondmfg.com

REV: 07.01.2020