DATASHEET - LS-S11-24DFT-ZBZ/X



Position switch, 1N/O+1N/C, basic, spring-powered interlock

Part no.	**LS-S11-24DFT-ZBZ/X**
Catalog No.	**106829**
Eaton Catalog No.	**LS-S11-24DFT-ZBZ-X**
EL-Nummer (Norway)	**0004356170**

Delivery program

Basic function			Position switches Safety position switches
Part group reference			LS…ZBZ/X
Product range			Basic units with spring-powered interlock (closed-circuit principle)
Degree of Protection			IP65
Features			Basic device, expandable
Ambient temperature		°C	-25 - +40
Description			With interlock monitoring with auxiliary release mechanism Monitoring of door position: continuous
Approval			DGUV Test ET 12013 Sicherheit geprüft tested safety
Contacts			
N/O = Normally open			1 N/O
N/C = Normally closed			1 NC
Notes			= safety function, by positive opening to IEC/EN 60947-5-1
Contact sequence			13 A1 A2 21 14 22
Rated control voltage for magnetic drive	U_s	V	24 V DC
Housing			Insulated material
Connection type			Screw terminal

Notes Switch must never be used as a mechanical stop!
The operating head can be rotated manually in 90° steps without tools to suit the specified level of actuation.
With the actuator inserted, the N/O contact is open and the N/C contact is closed.
For degree of protection IP65, use V-M20 (206910) cable glands with connecting thread of max. 9 mm length.
In the event of power failure (e.g., during commissioning), the device can be released with a screwdriver. The auxiliary release mechanism must be sealed! → Instructional leaflet IL 05208005Z

Technical data

General

Standards			IEC/EN 60947
Climatic proofing			Damp heat, constant, to IEC 60068-2-78; damp heat, cyclical, to IEC 60068-2-30
Ambient temperature		°C	-25 - +40
Mounting position			As required
Degree of Protection			IP65
Terminal capacities		mm^2	
Solid		mm^2	1 x (0.75 - 2.5) 2 x (0.75 - 1.5)

Flexible with ferrule		mm^2	1 x (0.5 - 1.5) 2 x (0.5 - 1.5)
Terminal screw			PH1
Tightening torque for terminal screw		Nm	0.9

Contacts/switching capacity

Rated impulse withstand voltage	U_{imp}	V AC	4000
Rated insulation voltage	U_i	V	400
Overvoltage category/pollution degree			III/3
Rated operational current	I_e	A	
AC-15			
24 V	I_e	A	6
220 V 230 V 240 V	I_e	A	6
380 V 400 V 415 V	I_e	A	4
DC-13			
24 V	I_e	A	3
110 V	I_e	A	0.8
220 V	I_e	A	0.3
Supply frequency		Hz	max. 400
Short-circuit rating to IEC/EN 60947-5-1			
max. fuse		A gG/gL	6
Repetition accuracy		mm	0.02
Rated conditional short-circuit current		kA	1

Mechanical variables

Lifespan, mechanical	Operations	$x\ 10^6$	1
Mechanical shock resistance (half-sinusoidal shock, 20 ms)			
Standard-action contact		g	10
Operating frequency	Operations/h		≦ 800

Actuation

Mechanical			
Actuating force at beginning/end of stroke		N	25/15 (plug-in/pull-out)
Mechanical holding force acc. to GS-ET-19 (04/2004)			
XG, XW, XNG		N	1700
XWA, XFG, XF		N	1600
XNW		N	1200
Electromechanical			
For magnet			
Power consumption			
at 120 V AC		VA	8
at 230 V AC		VA	11
at 24 V DC		W	8
Pick-up and drop-out values		$x\ U_s$	0.85 - 1.1
Magnet duty factor		% ED	100

Design verification as per IEC/EN 61439

Technical data for design verification			
Rated operational current for specified heat dissipation	I_n	A	6
Heat dissipation per pole, current-dependent	P_{vid}	W	0.13
Equipment heat dissipation, current-dependent	P_{vid}	W	0
Static heat dissipation, non-current-dependent	P_{vs}	W	0
Heat dissipation capacity	P_{diss}	W	0
Operating ambient temperature min.		°C	-25
Operating ambient temperature max.		°C	40
IEC/EN 61439 design verification			
10.2 Strength of materials and parts			
10.2.2 Corrosion resistance			Meets the product standard's requirements.

10.2.3.1 Verification of thermal stability of enclosures			Meets the product standard's requirements.
10.2.3.2 Verification of resistance of insulating materials to normal heat			Meets the product standard's requirements.
10.2.3.3 Verification of resistance of insulating materials to abnormal heat and fire due to internal electric effects			Meets the product standard's requirements.
10.2.4 Resistance to ultra-violet (UV) radiation			Meets the product standard's requirements.
10.2.5 Lifting			Does not apply, since the entire switchgear needs to be evaluated.
10.2.6 Mechanical impact			Does not apply, since the entire switchgear needs to be evaluated.
10.2.7 Inscriptions			Meets the product standard's requirements.
10.3 Degree of protection of ASSEMBLIES			Does not apply, since the entire switchgear needs to be evaluated.
10.4 Clearances and creepage distances			Meets the product standard's requirements.
10.5 Protection against electric shock			Does not apply, since the entire switchgear needs to be evaluated.
10.6 Incorporation of switching devices and components			Does not apply, since the entire switchgear needs to be evaluated.
10.7 Internal electrical circuits and connections			Is the panel builder's responsibility.
10.8 Connections for external conductors			Is the panel builder's responsibility.
10.9 Insulation properties			
10.9.2 Power-frequency electric strength			Is the panel builder's responsibility.
10.9.3 Impulse withstand voltage			Is the panel builder's responsibility.
10.9.4 Testing of enclosures made of insulating material			Is the panel builder's responsibility.
10.10 Temperature rise			The panel builder is responsible for the temperature rise calculation. Eaton will provide heat dissipation data for the devices.
10.11 Short-circuit rating			Is the panel builder's responsibility. The specifications for the switchgear must be observed.
10.12 Electromagnetic compatibility			Is the panel builder's responsibility. The specifications for the switchgear must be observed.
10.13 Mechanical function			The device meets the requirements, provided the information in the instruction leaflet (IL) is observed.

Technical data ETIM 7.0

Sensors (EG000026) / End switch (EC000030)		
Electric engineering, automation, process control engineering / Binary sensor technology, safety-related sensor technology / Position switch / Position switch (Type 1) (ecl@ss10.0.1-27-27-06-01 [AGZ382015])		
Width sensor	mm	60
Diameter sensor	mm	0
Height of sensor	mm	173
Length of sensor	mm	39
Rated operation current Ie at AC-15, 24 V	A	6
Rated operation current Ie at AC-15, 125 V	A	6
Rated operation current Ie at AC-15, 230 V	A	6
Rated operation current Ie at DC-13, 24 V	A	3
Rated operation current Ie at DC-13, 125 V	A	0.8
Rated operation current Ie at DC-13, 230 V	A	0.3
Switching function		Slow-action switch
Switching function latching		No
Output electronic		No
Forced opening		Yes
Number of safety auxiliary contacts		1
Number of contacts as normally closed contact		1
Number of contacts as normally open contact		1
Number of contacts as change-over contact		0
Type of interface		None
Type of interface for safety communication		None
Construction type housing		Cuboid
Material housing		Plastic
Coating housing		Other
Type of control element		Other
Alignment of the control element		Other
Type of electric connection		Other
With status indication		No

Suitable for safety functions		Yes
Explosion safety category for gas		None
Explosion safety category for dust		None
Ambient temperature during operating	°C	25 - 70
Degree of protection (IP)		IP65
Degree of protection (NEMA)		13

Approvals

Product Standards		IEC/EN 60947-5; UL 508; CSA-C22.2 No. 14; CE marking
UL File No.		E29184
UL Category Control No.		NKCR
CSA File No.		12528
CSA Class No.		3211-03
North America Certification		UL listed, CSA certified
Degree of Protection		IEC: IP65, UL/CSA Type 3R, 4X (indoor use only), 12, 13

Dimensions

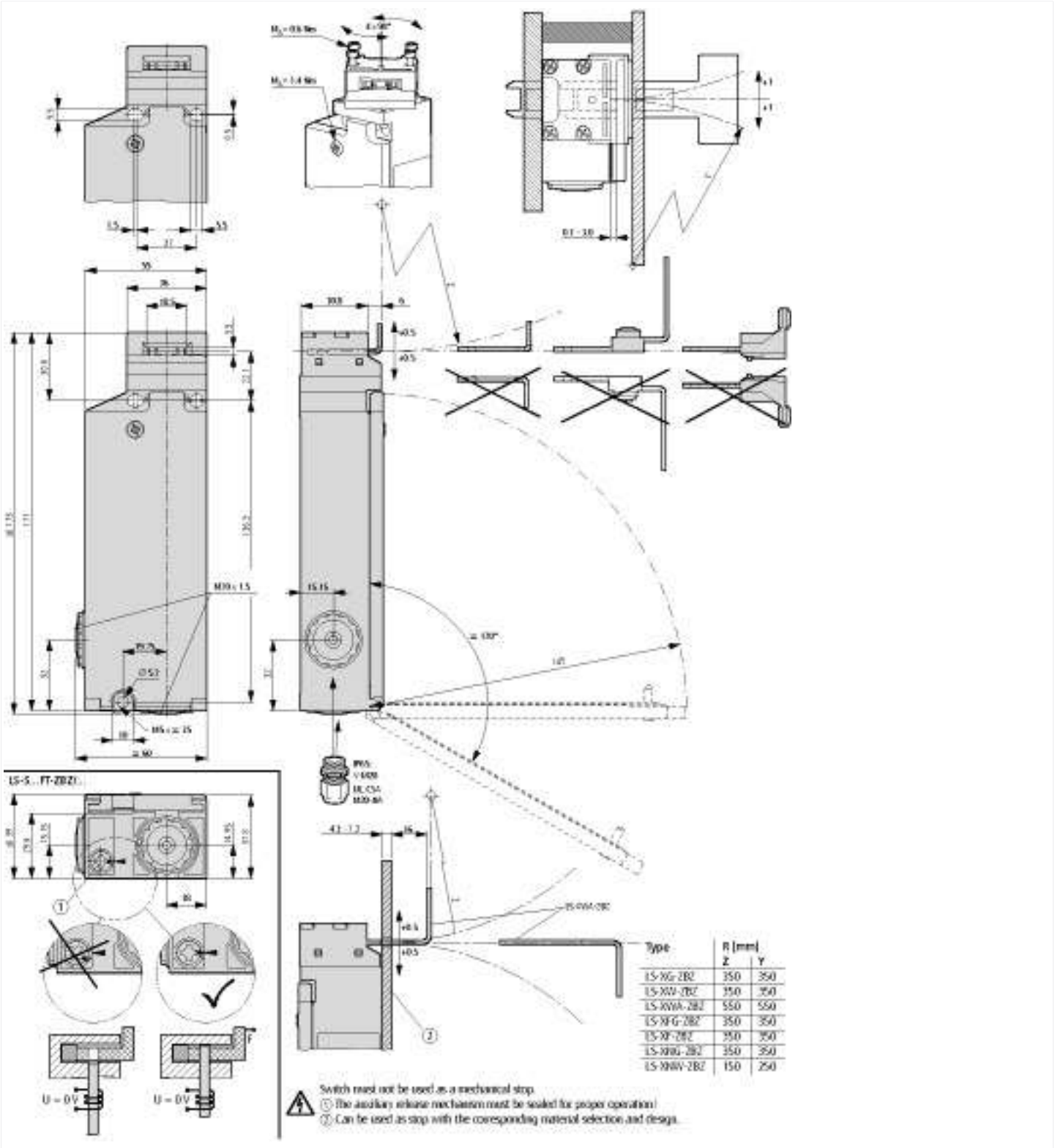

Additional product information (links)

IL05208005Z (AWA1310-2354) Safety position switch	
IL05208005Z (AWA1310-2354) Safety position switch	ftp://ftp.moeller.net/DOCUMENTATION/AWA_INSTRUCTIONS/IL05208005Z2018_05.pdf

© 11/2018 by Eaton Industries GmbH