OBF503

Fibre-optic amplifier

OBF-FAKG/T/AS

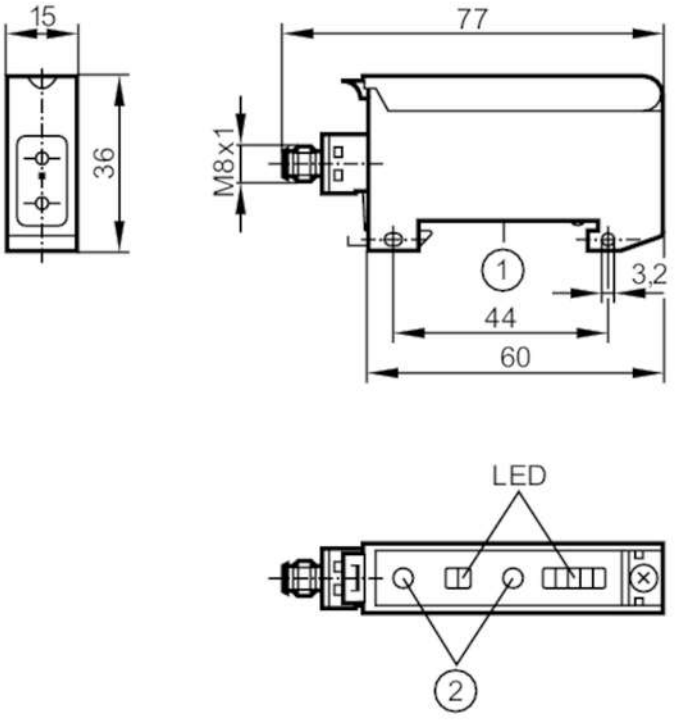

1 mounting on DIN rail
2 setting pushbuttons

Product characteristics		
Type of light		red light
Housing		rectangular
Application		
Design		Fibre-optic amplifiers for acrylic fibre optics
Electrical data		
Operating voltage	[V]	10...30 DC
Current consumption	[mA]	< 50
Protection class		III
Reverse polarity protection		yes
Type of light		red light
Wave length	[nm]	630
Outputs		
Electrical design		PNP/NPN; (automatic load detection PNP/NPN)
Output function		light-on/dark-on mode; (programmable)
Max. voltage drop switching output DC	[V]	2.5
Permanent current rating of switching output DC	[mA]	100
Switching frequency DC	[Hz]	3000
Short-circuit protection		yes

OBF503

Fibre-optic amplifier

OBF-FAKG/T/AS

Type of short-circuit protection		pulsed
Overload protection		yes
Time function	[s]	0.001...0.09
Detection zone		
Range	[m]	0...2; (Through-beam sensor)
Range	[mm]	0...100; (Diffuse reflection sensor)
Range adjustable		yes
Operating conditions		
Ambient temperature	[°C]	-25...60
Protection		IP 65
Tests / approvals		
EMC		EN 60947-5-2
MTTF	[years]	837
Mechanical data		
Weight	[g]	48
Housing		rectangular
Type of mounting		mounting on DIN rail; (TH35 (EN 60715))
Dimensions	[mm]	36 x 15 x 60
Materials		PPE modified
Lens alignment		side lens
Displays / operating elements		
Display	switching status	1 x LED, yellow
	operation	1 x LED, green
	unsafe zone	1 x LED, red
	excess gain	4 x LED, green
Remarks		
Remarks		light-on mode corresponds to the NC output function for through-beam fibre optics
		corresponds to the NO output function for diffuse-reflection fibre optics
		dark-on mode corresponds to the NO output function for through-beam fibre optics
		corresponds to the NC output function for diffuse-reflection fibre optics
		operating voltage "supply class 2" according to cULus
Pack quantity		1 pcs.

OBF503

Fibre-optic amplifier

OBF-FAKG/T/AS

Electrical connection

Connector: 1 x M8; coding: A

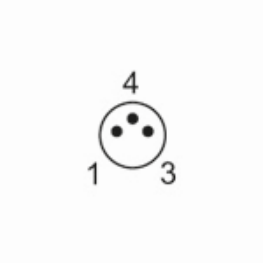

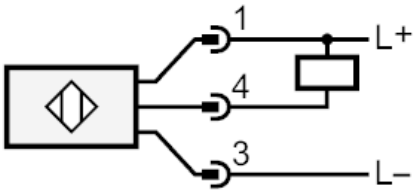

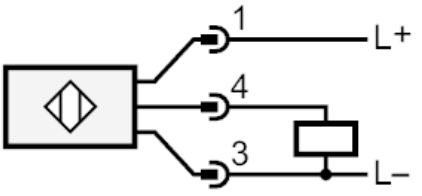

Diagrams and graphs

excess gain graph

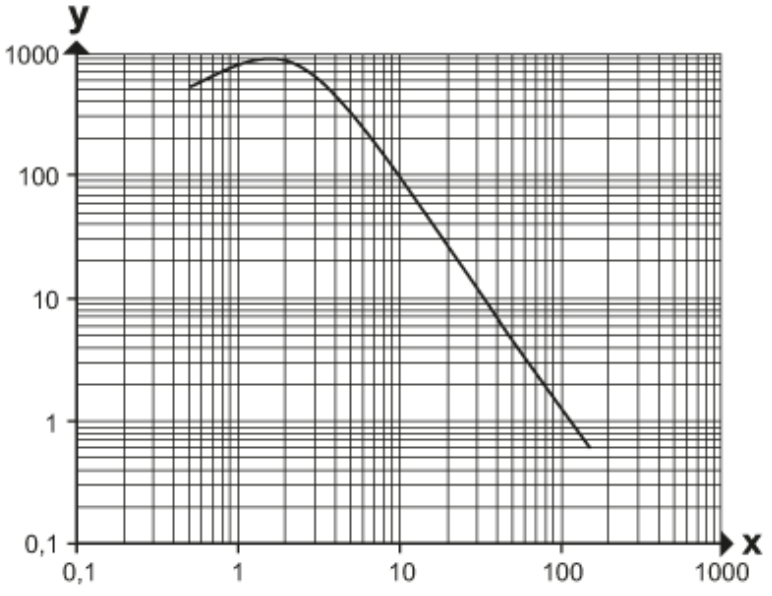

x: Abstand [mm]

y: Funktionsreservefaktor