E20740

Angle support for photoelectric sensors

90 DEG ATTACHMENT FOR OGP

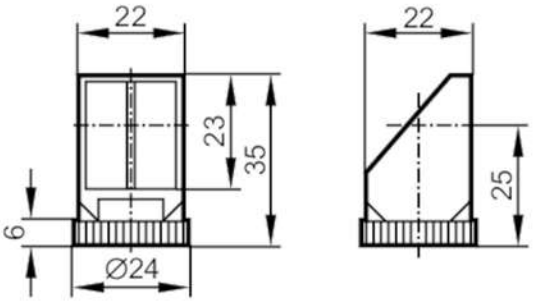

Application		
Design		for sensors OG5xxx
Mechanical data		
Weight	[g]	20.5
Materials		housing: ABS; lens: glass
Remarks		
Pack quantity		1 pcs.
Diagrams and graphs		