DUO-TOUCH Run Bar with STB Buttons

Datasheet

Self-checking ergonomic actuating devices



-RB1E02 without E-Stop



-RB1E02 with E-Stop

- Ergonomic design for reduced hand, wrist, and arm stresses associated with repeated switch operation; requires no physical pressure to operate
- Designed to minimize the possibility of defeat and accidental actuation
- Designed to comply with ANSI B11.19 and ISO 13851 (EN 574)
- Robust 13 gauge (0.090") cold-rolled steel construction
- Models available with IP20 or IP65 construction
- Two diverse-redundant microcontroller-based photoelectric STB self-checking touch buttons:
  - Continuous internal self-checking operation
  - Immunity to ambient light, EMI and RFI interference
  - High excess gain to cut through heavy contamination
  - LED power, output, and fault indicators
- Emergency stop button on some models
- Designed to be interfaced with DUO-TOUCH SG two-hand control modules or other control systems that comply, at minimum, with ANSI NFPA 79 or IEC 60204-1 two-hand control requirements (e.g., anti-tie down)
- Accessory EZ-LIGHT™ with blue, red, green, and amber LEDs available
- Accessory brackets and telescoping floor-mounted stands available

Models	Run Bar Description	Touch Button Description	E-Stop Button	Connections
STBVP6-RB1	DUO-TOUCH Run Bar, IP20 metal construction	Two model STBVP6 optical touch buttons (solid-state complementary PNP outputs, polyetherimide upper housing)	Not included	Terminal strip connection
STBVP6-RB1E02			Model SSA-EBM-02L E-stop button (two N.C. safety contacts)	
STBVP6-RB1Q8			Not included	8-pin Mini-style QD
STBVP6-RB2	DUO-TOUCH Run Bar, IP65 metal construction		Not included	Terminal strip connection
STBVP6-RB2E02			Model SSA-EBM-02L E-stop button (two N.C. safety contacts)	
STBVP6-RB2Q8			Not included	8-pin Mini-style QD
DUO-TOUCH® Run Bar Kits	Call for assistance and availability			

WARNING: Not a Stand-Alone Safeguarding Device

This Banner device is not a stand-alone point-of-operation guarding device, as defined by OSHA regulations. It is necessary to install point-of-operation guarding devices, such as safety light screens and/or hard guards, to protect personnel from hazardous machinery. Failure to install point-of-operation guards on hazardous machinery can result in a dangerous condition which could lead to serious injury or death.

Important . . . Read This Before Proceeding!

In the United States, the functions that the Banner DUO-TOUCH Two-Hand Control Module is intended to perform are regulated by the Occupational Safety and Health Administration (OSHA). Whether or not any particular DUO-TOUCH Two-Hand Control Module installation meets all applicable OSHA requirements depends upon factors that are beyond the control of Banner Engineering Corp. These factors include the specific ways the safety module is applied, installed, wired, operated, and maintained.

Banner Engineering Corp. has attempted to provide complete application, installation, operation, and maintenance instructions. In addition, we suggest that any questions regarding the use or installation of this two-hand control safety system be directed to the factory applications department at the telephone numbers or address shown on the back cover of this manual.

The user of this Two-Hand Control safety module must ensure that all machine operators, maintenance personnel, electricians, and supervisors are thoroughly familiar with and understand all instructions regarding the installation, maintenance, and use of this system, and with the machinery upon which it is installed.

The user and any personnel involved with the installation and use of this safety module must be thoroughly familiar with all applicable OSHA regulations and ANSI standards. The regulations and standards, listed below, directly address the use of two-hand control systems. Banner Engineering Corp. makes no claim regarding a specific recommendation of any organization, the accuracy or effectiveness of any information provided, or the appropriateness of the provided information for a specific application.

The user has the responsibility to ensure that all local, state, and national laws, rules, codes, and regulations relating to the use of this Two-Hand Control module are satisfied. Extreme care is urged that all legal requirements are met and that all installation and maintenance instructions contained in this manual are followed.

U. S. Standards Applicable to Use of Two-Hand Control Systems

ANSI B11 Standards for Machine Tools “Safety Requirements for the Construction, Care and Use”
Available from: Safety Director AMT – The Association for Manufacturing Technology 7901 Westpark Drive McLean, VA 22102 Tel.: 703-893-2900 Fax: 703-893-1151

NFPA79 “Electrical Standard for Industrial Machinery”
Available from: National Fire Protection Association 1 Batterymarch Park, P.O. Box 9101 Quincy, MA 02269-9101 Tel.: 800-344-3555

ANSI/RIA R15.06 “Safety Requirements for Industrial Robot and Robot Systems”
Available from: Robotic Industries Association 900 Victors Way, P.O. Box 3724 Ann Arbor, MI 48106 Tel.: 734-994-6088

International/European Standards

ISO TR12100-1 & -2 (EN 292-1 & -2) Safety of Machinery – Basic Concepts, General Principles for Design

IEC 60204-1 Electrical Equipment of Machines Part 1: General Requirements

ISO 13849-1 (EN 954-1) Safety-Related Parts of Control Systems

ISO 13855 (EN 999) The Positioning of Protective Equipment in Respect to Approach Speeds of Parts of the Human Body

ISO 13851 (EN 574) Two-Hand Control Devices – Functional Aspects – Principles for Design *(also request a type "C" standard for your specific machinery.)*

Overview

The DUO-TOUCH® Run Bar with STB Self-Checking Optical Touch Buttons is designed to satisfy the ergonomic principles found in ANSI B11.TR1 to reduce the hand, wrist, and arm stresses associated with mechanical push buttons. The rugged 13-gauge steel housing is designed to prevent objects (such as loose clothing or debris) from inadvertently actuating the switch, which might accidentally block the sensing beam.

The STB Touch Buttons are touch-activated photoelectric devices designed to replace capacitive touch switches and mechanical push buttons. Their outputs activate when a finger is present in the yoke (“touch area”) of the switch, interrupting the button’s infrared sensing beam. These “buttons” require no physical pressure to operate, and are immune to EMI, RFI, and ambient light interference.

The STB button’s internal design incorporates dual microcontrollers, allowing a connection to a Banner DUO-TOUCH SG Two-Hand Control Safety Module (or other two-hand control systems designed to meet Type IIIC requirements per ISO 13851 (EN 574), and ISO 13849-1 category 4 requirements).

The microcontrollers in the STB buttons perform a continuous self-check: the emitter is continuously pulsed and receiver response is checked accordingly by the microcontrollers. STB touch buttons are designed to immediately detect any internal component failure, go into lockout mode, and indicate the failure with a flashing red Fault LED.

STB Series Touch Button LED Indicators	
Power On (green)	Steady ON when power is applied

STB Series Touch Button LED Indicators	
Output, Fault (green)	Steady ON when button is activated OFF when button is not activated Flashing when a fault condition is detected

Applications

The DUO-TOUCH Run Bar is intended for use as the initiation device in a two-hand control system for most powered machinery, when machine cycling is controlled by an individual.

The two-hand control system makes the operator a “hostage” while the hazard is present, thus limiting or preventing exposure of that operator to the hazard. The two-hand control actuators must be located in a way that hazardous motion is completed or stopped before the operator can release one or both of the buttons and reach the hazard (see Separation Distance).

Two-hand control systems must meet requirements found in several U.S. and international standards. See the machine-specific standard (e.g., “C-level” in ISO/EN standards), ANSI NFPA 79, IEC 60204-1, ANSI B11.19, and ISO 13851 (EN 574) for complete information. Some of the requirements are:

- Simultaneous use of both hands (“synchronous action”): both buttons must be actuated within 500 ms of one another, even under single-fault conditions. Whenever this time is exceeded, both actuating devices must be released. This requirement reduces the possibility of intentional defeat and unintended initiation.
- Continuous actuation of both buttons during the hazardous situation. Releasing one or both buttons must cause the ceasing of the hazardous situation, and before the machine cycle can continue, both buttons must be released.
- When used in single-cycle or single-stroke mode, the machine control must provide an anti-repeat feature so that the operator must release the two-hand control actuators after each machine cycle, before a new cycle can be initiated.
- The actuating devices must be protected from accidental or unintended operation.
- When used for safeguarding, the interfacing must be at an appropriate level of safety circuit integrity as determined by a risk assessment. In the U.S., the required level of integration is Control Reliability (see ANSI B11.19). In many situations governed by ISO/IEC and EN regulations, the required integration for Type IIIC per ISO 13851 (EN 574) is Category 4 per ISO 13849-1 (EN 954-1).

To assist in complying with these requirements, Banner Engineering recommends interfacing the STB buttons of the run bar with a DUO-TOUCH SG Two-Hand Control Module, such as the model AT-FM-10K, AT-..M-13A, or AT-..M-11KM, or other Type IIIC-compliant two-hand control system.



WARNING: Point-of-Operation Guarding

When properly installed, a two-hand control device provides protection only for the hands of the machine operator. It may be necessary to install additional safeguarding, such as safety light screens, additional two-hand controls, and/or hard guards, to protect all individuals from hazardous machinery.

Failure to properly guard hazardous machinery can result in a dangerous condition which could lead to serious injury or death.



CAUTION: Hand Controls

The environment in which hand controls are installed must not adversely affect the means of actuation. Severe contamination or other environmental influences may cause slow response or false On conditions of mechanical or ergonomic buttons. This may result in exposure to a hazard.

Mechanical Installation

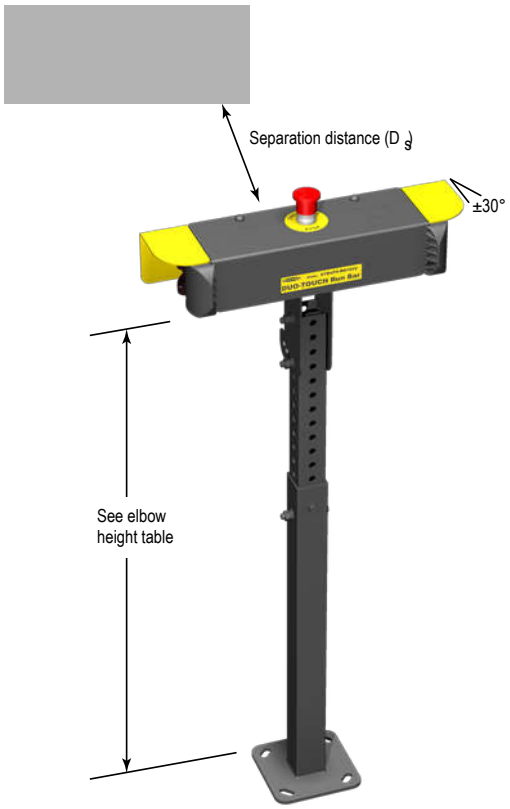

Figure 1. Run Bar Location

Mount the DUO-TOUCH Run Bar to maximize its ergonomic design and minimize the possibility of defeat.

To minimize the possibility of defeat, ISO 13851 (EN 574) recommends that the hand controls be arranged on a horizontal (or nearly horizontal) surface, 1100 mm (43.3") above the floor. The Run Bar makes this installation easy.

To maximize ergonomics, ANSI B11.TR1 recommends that for light to normal work the position should be 50 to 100 mm (2" to 4") above or below elbow height. Elbow height should be determined and adjusted for each individual operator. Anthropometric tables provide a range for guidance (see ANSI B11.TR1 Annex A):

Tilting the run bar (using the bracket's multiple-hole adjustment) allows for varying operator heights while maintaining a neutral wrist position. This rotation should not exceed ±30°, especially when an emergency stop button is mounted on the top of the run bar. Hand and wrist posture is considered to be neutral when the hand is neither flexed nor extended beyond about 15° of the normally relaxed position.

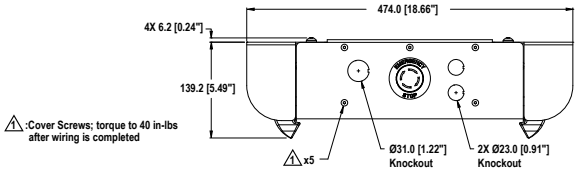

Figure 2. Torque Spec for RB2

Elbow Height (to floor, without shoes)	5%	95%
	Male/Female	Male/Female
Inches	39.2" / 36.5"	45.4" / 42.3"
Millimeters	995 / 926 mm	1153 / 1074 mm

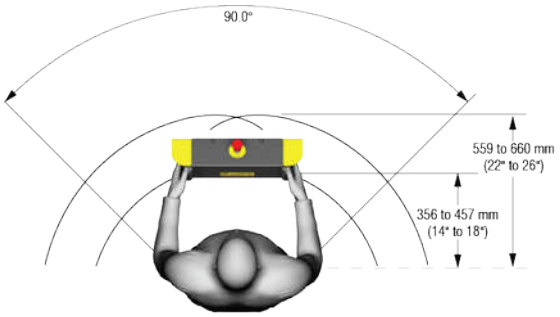

Figure 3. ANSI BII.TR1 Recommended Maximum Reach Distances

Per ANSI B11.TR1, the most desirable location for controls used by a standing operator is a position directly in front of the operator, and at a height between chest and waist level. Frequent reaches should nominally be made within 350 to 450 mm (14" to 18") from the center of the shoulder to the run bar. Only occasional reaches should be made within 550 to 650 mm (22" to 26"); avoid reaches farther than 650 mm (26"), see Figure 2.

WARNING: Location of Touch Button Controls

Hand controls must be mounted a safe distance from moving machine parts, as determined by the appropriate standard. It must not be possible for the operator or other non-qualified persons to relocate them. Failure to establish and maintain the required safety distance may result in serious injury or death.

Two-Hand Control Separation (Safety) Distance

Both hand controls must be located far enough away from the nearest hazard point that the operator cannot reach the hazard with a hand or other body part before the hazardous motion ceases. This is the “separation distance” (“safety distance”), and may be calculated as follows. The formulas differ slightly between U.S. and EU-Certified installations, but the concepts are similar.

Formulas for U.S. Installations

For Part-Revolution Clutch Machinery where the machine and its controls allow the machine to stop motion during the hazardous portion of the machine cycle, use the following formula:

$$D_s = K \times (T_s + T_r + T_h)$$

For Full-Revolution Clutch Machinery where the machine and its controls are designed to complete a full machine cycle, once activated, use the following formula:

$$D_s = K \times (T_m + T_r + T_h)$$

Formula for EU-Certified Installations

The formula used to calculate the minimum safety distance (S) from the nearest actuator to the danger zone is:

$$S = (K \times T) + C$$

In all cases, where:

D_s = the separation (safety) distance in inches
S = the minimum safety distance in millimeters
K = OSHA/ANSI and ISO 13855 hand speed constant of 1600mm/s (63" per second) (NOTE 1 below)
T = the overall stop time of the machine, measured from the actuation of the sensing function to the final ceasing of all motion.
T_s = the stop time (in seconds) of the machine, measured from the application of the “stop” signal to the final ceasing of all motion, including stop times of all relevant control elements, and measured at maximum machine velocity (see NOTE 2)
T_r = 0.035 seconds (the response time of the Module as measured from the time either hand disengages a hand control.
T_h = the response time of the slowest hand control (from the time when a hand disengages that control until the switch opens; see NOTE 3)

T_m = the maximum time (in seconds) the machine takes to cease all motion after it has been tripped. For full-revolution clutch presses with only one engaging point, T_m is equal to the time necessary for one and one-half revolutions of the crankshaft. For full-revolution clutch presses with more than one engaging point, T_m is calculated as follows:

$$T_m = (1/2 + 1/N) \times T_{cy}$$

where:

N = number of clutch engaging points per revolution
T_{cy} = time (in seconds) necessary to complete one revolution of the crankshaft
C = the added distance due to depth penetration factor: 250 mm, per ISO 13855. The ISO 13855 “C” factor can be reduced to 0 if the risk of encroachment is eliminated, but the safety distance must always be 100 mm or greater.

NOTES:

1. The hand-speed constant (K) has been determined by various studies, and although these studies indicate speeds of 1600 mm/s (63”/second), 2000 mm/s (79”/second), to more than 2540 mm/s (100”/second), they are not conclusive determinations. The employer should consider all factors, including the physical ability of the operator, when determining the value of K to be used.
2. T_s is usually measured by a stop-time measuring device. If the specified machine stop time is used, add at least 20% as a safety factor to account for brake system deterioration. If the stop-time of the two redundant machine control elements is unequal, the slower of the two times must be used for calculating the separation distance.
3. T_h is usually insignificant for purely mechanical switches. However, Th should be considered for safety distance calculation when using electronic or electromechanical (i.e. powered) hand controls. For Banner Self-checking Touch Buttons (STBs), response time = 0.02 seconds.

Separation Distance (D_s) Calculation

The following example illustrates the use of the formula to calculate separation distance for a part-revolution clutch machine. This example uses 0.50 seconds as a typical value for T_s and 0.02 seconds for T_h:

K = 63" per second,

T_s = 0.50 seconds (measured by a stop-time measuring device)

T_r = 0.035 seconds

T_h = 0.02 seconds

$$D_S = K \times (T_s + T_r + T_h)$$

= 63" (0.50 + 0.035 + 0.02)

= 35"

In this example, both hand controls must be located no closer than 36" from the nearest hazard point.

Electrical Installation

Electrical installation of hand controls, the DUO-TOUCH SG Safety Module, and the interconnection to the machine control must be made by qualified personnel and must comply with NEC (National Electrical Code), ANSI/NFPA 79 or IEC 60204-1, and all applicable local standards.

It is not possible to give exact wiring instructions for a Safety Module that interfaces to a multitude of machine control configurations. The following guidelines are general in nature.

CAUTION: Disconnect Power Before Wiring

Before making any wire connections, make certain all power is disconnected from the Safety Module and the machine to be controlled.

Electrical installation of hand controls, the DUO-TOUCH SG Safety Module, and the interconnection to the machine control must be made by qualified personnel and must comply with NEC (National Electrical Code), ANSI/NFPA79 or IEC60204-1, and all applicable local standards.

Dangerous voltages may be present along the Safety Module wiring barriers whenever power to the machine control elements is On. Exercise extreme caution whenever machine control power is or may be present. Always disconnect power to the machine control elements before opening the enclosure housing of the Safety Module.

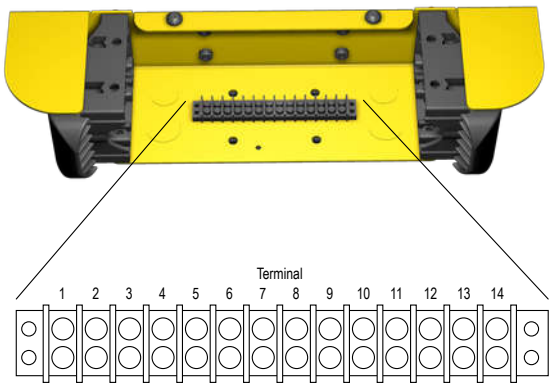

Figure 4. Terminal Strip Connections

Terminal	Connection
1	STB 1 N.O. (black)
2	STB 1 COM (yellow, if used)
3	STB 1 N.C. (white)
4	STB +24V dc (brown)
5	STB 0V dc (blue)
6	STB 2 N.O. (black)
7	STB 2 COM (yellow, if used)
8	STB 2 N.C. (white)

NOTE: The STBVP6 hand control buttons are pre-wired to terminals 1, 3, 4, 5, 6, and 8. Terminals 2 and 7 are reserved for use of STBVR81 buttons.

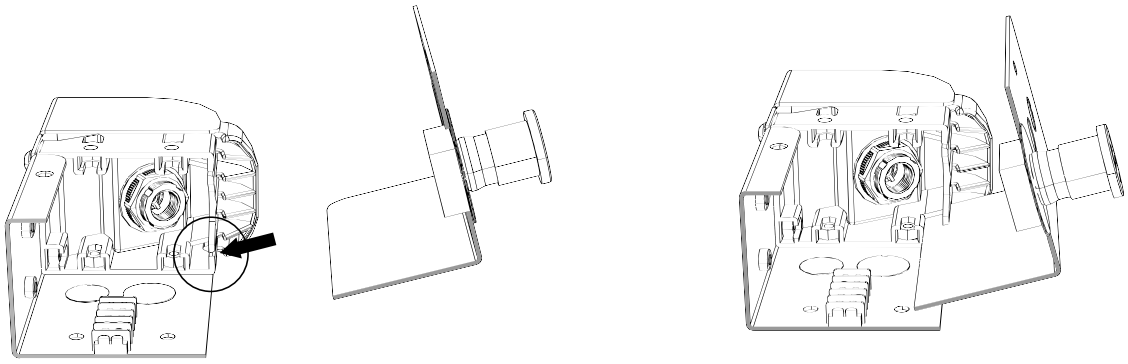

Figure 5. Use the slots in the run bar housing to hold the cover for the terminal connection

8-Pin Mini-Style Output QD Connector Male Face View	Mating Cable: QDS-8..C			SAE H1738-2 Alternate Color [1]
	Pin	Color	Function	
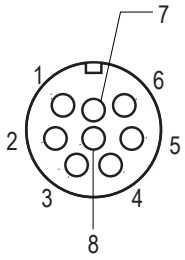 *Figure 6. 8-pin Mini-style QD Connection*	1	brown	+24 V dc	orange
	2	orange/black	N.O. STB2	blue
	3	orange	N.C. STB2	white/black
	4	white	N.C. STB1	black
	5	black	N.O. STB1	white
	6	blue	0 V dc	red
	7	green/yellow	Gnd/PE	green
	8	violet	Not Connected (future use)	red/black

Connection of STB Touch Buttons

To maintain a Type IIIC / Category 4 connection, both the normally open and the normally closed outputs of each STB button must be connected to a two-hand control system or module (e.g., Banner model AT-FM-10K, AT-..M-13A, AT-..M-11KM or the Banner Safety Controller SC22-3) that meets the requirements listed in the Applications section and monitors the STB outputs such that if they are not in a complementary state (one open/non-conducting and one closed/ conducting) the system will lock out and prevent further operation until the fault is repaired.

The +24 V dc supply power for the STB buttons must be the same supply that powers the two-hand control system or module. If a DUO-TOUCH SG safety module is used, use terminals Z1 and Z2 for supply voltage for the STB buttons.

[1] Listed as a customer courtesy. Verify suitability of these cables for each application.

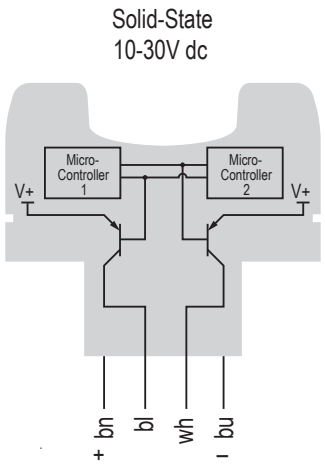

Figure 7. STB Touch Button Block Diagram

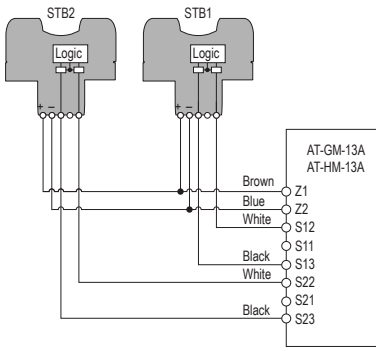

Figure 8. Connection to Two STB Touch Buttons with PNP Outputs

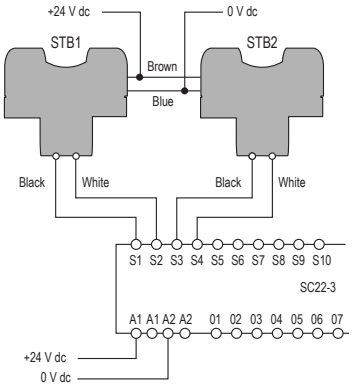

Figure 9. Connection of Two STB Buttons to the Banner Safety Controller

Connection of Emergency Stop Button

For models with an E-stop button, connection of the E-stop button is made at the screw terminals on the contact element mounted on the mounting adapter.

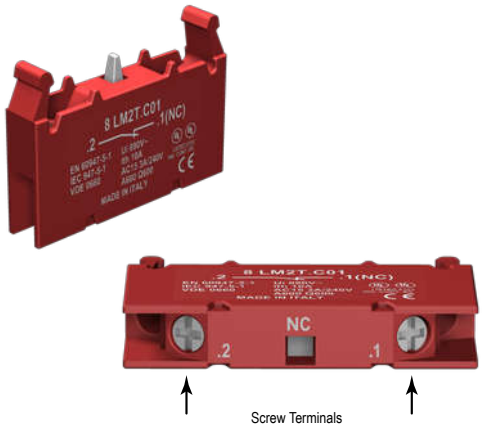

Figure 10. E-Stop Wiring Terminals

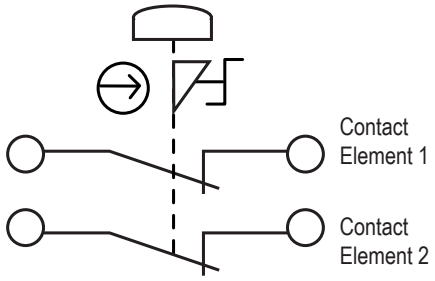

Figure 11. E-Stop Wiring Diagram

WARNING: Multiple E-Stop Switches

Whenever two or more E-stop switches are connected to the same E-stop safety module, the contacts of both switches must be connected together in series. This series combination is then wired to the respective safety module input. Never connect the contacts of multiple E-stop switches in parallel to the E-stop safety module inputs; this defeats the switch contact monitoring ability of the safety module, and creates an unsafe condition which may result in serious injury or death.

Checkout Procedures

Checkout procedures are dependent on what two-hand control system or module is interfaced with the DUO-TOUCH Run Bar. At minimum, the procedure should include the requirements listed in the Applications section and the following steps.



WARNING: Do Not Use System Until Checkouts Are Verified

If all of the described checks cannot be verified, do not attempt to use the two-hand control safety system until the defect or problem has been corrected. Attempts to use the guarded machine under such conditions may result in serious bodily injury or death.

1. Verify that all point-of-operation guards are in place and operating properly.
2. Verify the two actuating devices must be simultaneously engaged to actuate the machine (within ½ second).
3. For single-cycle machines: Verify that maintained engagement of the two actuating devices results in only one machine cycle.
4. For part-revolution clutch machines: Verify that release of either actuating device results in the immediate arrest of the machine motion.
5. Verify that the distance from each actuating device to the closest hazard point is not closer than the calculated safety distance.

Checkout procedures should be accomplished at installation (i.e., commissioning) and at periodic intervals, such as:

- Daily Checkout, to be performed at every power-up, shift change, and machine setup change, and to be performed by a designated person, appointed and identified in writing by the employer.
- Semi-Annual Checkout, to be performed at six-month intervals. This semi-annual checkout must be performed by a qualified person.* A copy of test results should be kept on or near the machine.

* Qualified person: A person who, by possession of a recognized degree or certificate of professional training, or who, by extensive knowledge, training, and experience, has successfully demonstrated the ability to solve problems relating to the installation, maintenance and use of the Two-Hand Control System.

Repairs

Contact Banner Engineering for troubleshooting of this device. Do not attempt any repairs to this Banner device; it contains no field-replaceable components. If the device or a device component is determined to be defective by a Banner Applications Engineer, they will advise you of Banner's RMA (Return Merchandise Authorization) procedure.



Important: If instructed to return the device, pack it with care. Damage that occurs in return shipping is not covered by warranty.



CAUTION: Abuse of Module After Failure

If an internal fault has occurred and the Module will not reset, do not tap, strike, or otherwise attempt to correct the fault by a physical impact to the housing. An internal relay may have failed in such a manner that its replacement is required.

If the Module is not immediately replaced or repaired, multiple simultaneous failures may accumulate such that the safety function can not be guaranteed.

Specifications

Power
Supply Voltage and Current: 10 to 30 V dc
Power Consumption: approx. 1.8 W @ 24 V dc (with no output load), for each STB
Supply Protection Circuitry: Protected against transient voltages and reverse polarity

Connections
Models STBVP6-RB1/-RB2 and -RB1E02/-RB2E02: Terminal strip connections inside run bar housing (STBs are pre-wired). E-stop button and EZ-LIGHT indicator (if used) are wired separately.
Models STBVP6-RB1Q8/-RB2Q8: 8-pin Mini-style quick-disconnect fitting

Construction
STB Buttons: Totally encapsulated, non-metallic enclosure; black polyetherimide yoke housing (see Application Note below); fiber-reinforced polyester base; electronics fully epoxy-encapsulated.
E-Stop Button: Polyamide red button with metal base.
Run Bar Housing: 13 ga (0.090") cold rolled steel with powder coat paint; polypropylene copolymer STB mount.

Ambient Light Immunity
Up to 100,000 lux

EMI/RFI Immunity
Immune to EMI and RFI noise sources, per IEC 947-5-2.

Application Notes
The STB's polyetherimide upper housing will become brittle with prolonged exposure to outdoor sunlight. Window glass effectively filters longer wavelength ultraviolet light and provides excellent protection from sunlight. Avoid contact with strong alkalis, hydrocarbons and fuels. Clean periodically using mild soap solution and a soft cloth. (Polycarbonate STB models are also available for use with the Run Bar; contact Factory for assistance.)

STB Indicators - 2 Green LEDs
Power: ON – power applied
Output/fault: ON – button is activated
Output/fault: OFF – button is deactivated
Output/fault: Flashing – internal fault or blocked button on power-up detected

Outputs
Configuration: Complementary PNP (sourcing) open-collector transistors
Protection Circuitry: Protected against false pulse on power-up; overload and short-circuit protection.
Response Time: 20 milliseconds ON/OFF

Output Rating
Maximum load: 150 mA
On-state saturation voltage: Less than or equal to 15 V @ full load
Off-state leakage current: Less than 1 µA

Environmental Rating
STBVP6-RB1 Run Bar Models meet IP20
STBVP6-RB2 Run Bar Models meet IP65

Operating Conditions
Temperature: 0° to +50° C (+32° to +122° F)
Maximum relative humidity: 90% @ +50° C (non-condensing)

Certifications
STB Buttons:
STBVP6-RB2...Run Bars:

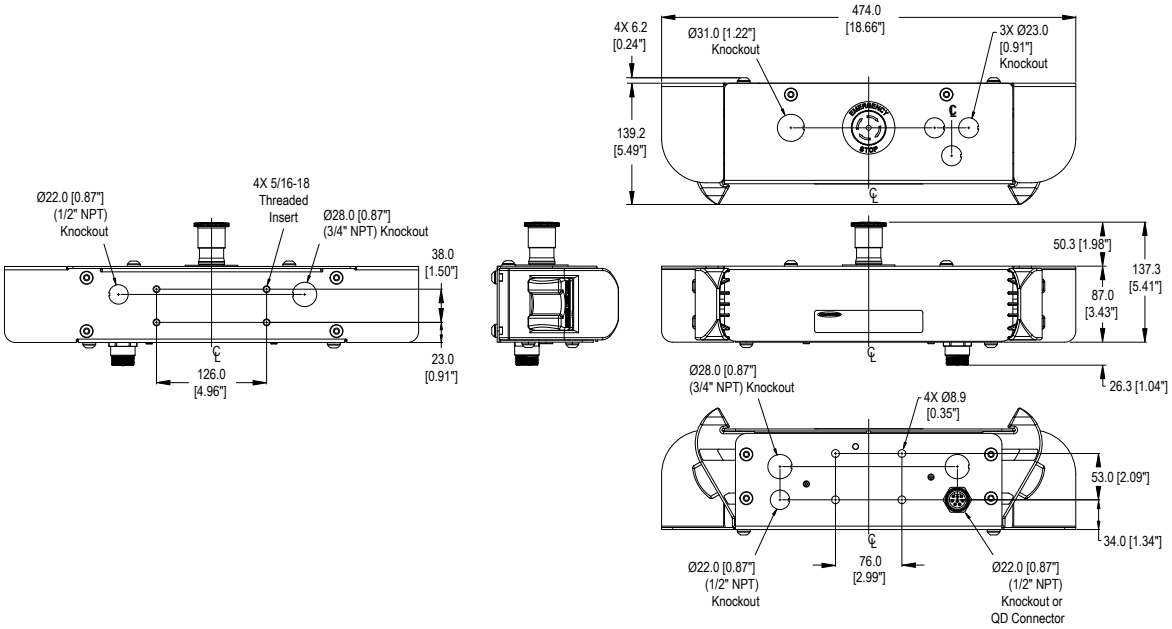

Figure 12. STBVP6-RB1 Dimensions

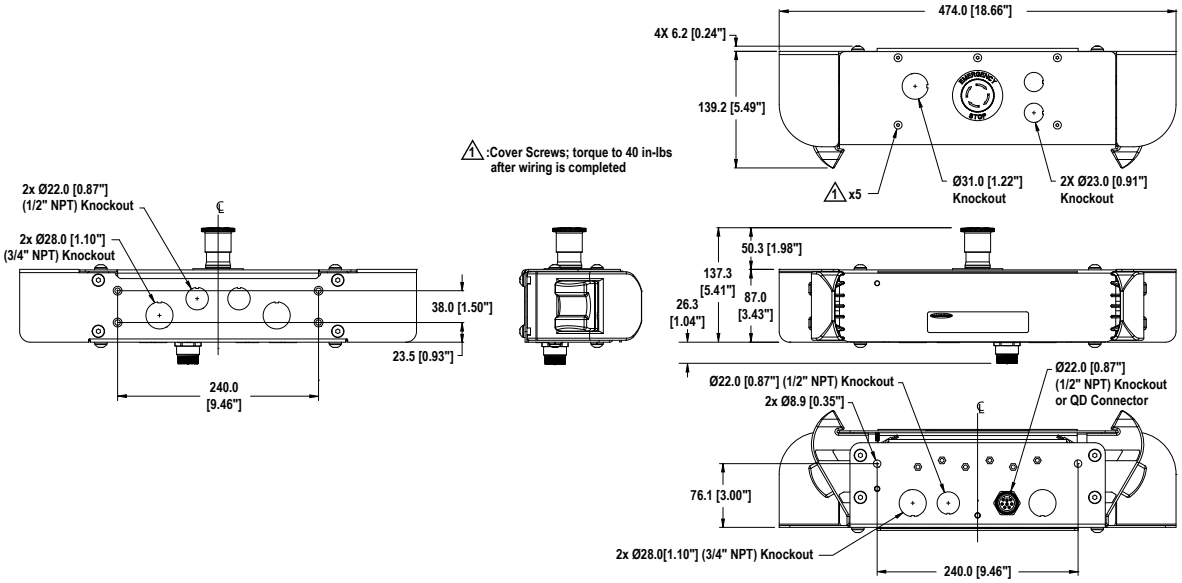

Figure 13. STBVP6-RB2 Dimensions

Accessories

Mounting Brackets for the STBVP6-RB1 Run Bar

Model	Description	
STBA-RB1-MB1	• Pair of wall-mount brackets; run bar “hangs” on vertical surface • Slotted holes for vertical adjustment • Made of 12 ga cold-rolled steel with black powdercoat paint	
STBA-RB1-MB2	• Universal-mount bracket; allows run bar to mount to vertical stand or surface • Slotted holes for adjustment • Made of 12 ga cold-rolled steel with black powdercoat paint	

Model	Description	
STBA-RB1-MB3	• Swivel-mount bracket; mounts to telescoping stands below • Holes for radial adjustment, 0°–30° in 10° increments • Made of 12 ga cold-rolled steel with black powdercoat paint • Replacement part; included with telescoping stands STBA-RB1-S1 and STBA-RB1-S2	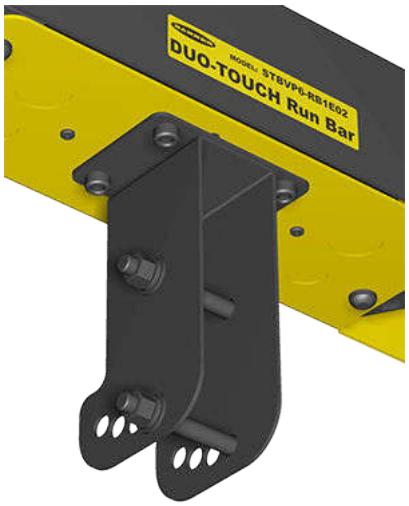

Mounting Brackets for the STBVP6-RB2 Run Bar

Model	Description	
STBA-RB2-MB1	• Pair of wall-mount brackets; run bar “hangs” on vertical surface • Slotted holes for vertical adjustment • Made of 12 ga cold-rolled steel with black powdercoat paint	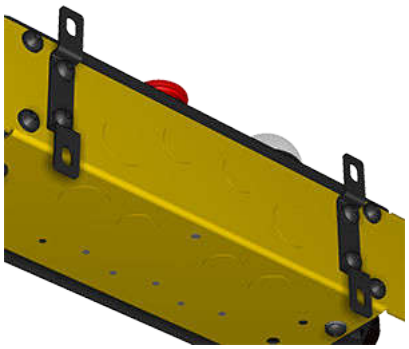
STBA-RB2-MB2	• Universal-mount bracket; allows run bar to mount to vertical stand or surface • Slotted holes for adjustment • Made of 12 ga cold-rolled steel with black powdercoat paint	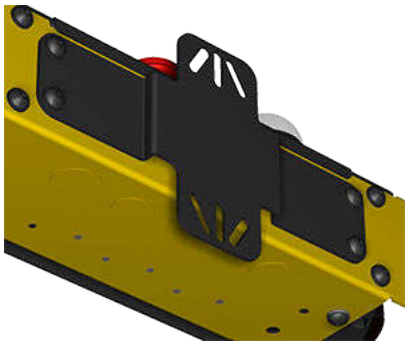

Model	Description	
STBA-RB2-MB3	• Swivel-mount bracket; mounts to telescoping stands below • Holes for radial adjustment, 0°–30° in 10° increments • Made of 12 ga cold-rolled steel with black powdercoat paint • Replacement part; included with telescoping stands STBA-RB2-S1 and STBA-RB2-S2	

Telescoping Stands

Model	Description	
STBA-RB1-S1 STBA-RB2-S1	• Floor-mounted, telescoping stand; locates touch buttons 800 to 1232 mm (31.5" to 48.5") above the floor surface • 150 mm (5.9") square stationary floor base with 4 mounting holes in corners • Telescoping square tubes made of 12 ga cold-rolled steel; base 1/4" cold-rolled steel; black powdercoat paint • STBA-RB1-S1 includes swivel-mount bracket STBA-RB1-MB3 to mount STBVP6-RB1... Run Bars • • STBA-RB2-S1 includes swivel-mount bracket STBA-RB2-MB3 to mount STBVP6-RB2... Run Bars • See datasheet 135635 for more information on STBA-RB1-S1 • See datasheet 145295 for more information on STBA-RB2-S1	

Model	Description	
STBA-RB1-S2 STBA-RB2-S2	• Free-standing, telescoping stand; locates touch buttons 800 to 1232 mm (31.5" to 48.5") above the floor surface • 610 x 610 mm (24" x 24") movable H-shaped floor base with mounting holes 560 mm (22") apart • Telescoping square tubes made of 12 ga cold-rolled steel; U-channel feet are 2"W x 1"H x 1/8" thick cold-rolled steel; black powdercoat paint • STBA-RB1-S2 includes swivel-mount bracket STBA-RB1-MB3 to mount STBVP6-RB1... Run Bars • • STBA-RB2-S2 includes swivel-mount bracket STBA-RB2-MB3 to mount STBVP6-RB2... Run Bars • See datasheet 135635 for more information on STBA-RB1-S2 • See datasheet 145295 for more information on STBA-RB2-S2	

EZ-Light for Two-Hand Control

Model	Description	
T30GRYB11P (shown on left) K50LGRYB11P (shown on right)	• EZ-LIGHT for Two-Hand Control • Four-color indication: red, blue, green, and yellow • See data sheet 134100 for more information	

EZ-LIGHT Wiring Table					
LED Function	Brown Wire	Gray Wire	Black Wire	White Wire	Typical Function
Red ON	+V dc	-	-	-	Stop and/or Not Ready
Blue ON	+V dc	+V dc	-		Stopped, but Ready/Enabled
Green ON	+V dc	+V dc	+V dc	-	Go
Yellow ON	+V dc	+V dc	+V dc	+V dc	Mute Condition
Red Flashing	Any other hookup combination				Abnormal State

NOTES:

- Blue wire connected to 0 V dc
- Supply Voltage and Current = 10 to 30 V dc, 60 mA max.

DUO-TOUCH® SG Two-Hand Control Modules, STB Compatible

N.C. = Normally Closed, N.O. = Normally Open

Model	Supply Voltage	Inputs	Safety Outputs	Output Rating	Auxiliary Outputs	Muting	Terminals
AT-FM-10K	24 V ac/dc	2 STB	2 N.O.	6 amps	-	-	Removable
AT-GM-13A	115 V ac/24 V dc		4 N.O.		1 NPN, 1 PNP, and 1 N.C.	-	
AT-HM-13A	230 V ac/24 V dc						

SC22-3 Safety Controller and STB Compatible QD Cables

All the cables listed are for a supply voltage of 24 V dc.

Kit Model	Terminal Type	Safety Outputs	Status Outputs	Safety Output Rating	Aux. Outputs	Inputs	USB A/B Cable	XM Card	XM Card Programming Tool	Communication Protocol	Muting
SC22-3-S	Screw	6 PNP Terminals (3 pairs)	10 Status	0.75 amps each output	10 PNP	22 (up to 10 STBs)	–	Yes	–	–	Yes
SC22-3-C	Clamp										
SC22-3-SU1	Screw						1.8 m		Yes		
SC22-3-CU1	Clamp										
SC22-3E-S	Screw		10 Status plus 32 Virtual Status	0.5 amps each output			–		–	EtherNet/IP & Modbus/TCP	
SC22-3E-C	Clamp										
SC22-3E-SU1	Screw						1.8 m		Yes		
SC22-3E-CU1	Clamp										

8-Pin Mini-style Cordsets

The following cordsets have an 8-pin mini-style connection on one end and are made of 20 gauge wire.

Models	Length	Banner Cable Pinout/ Color Code		SAE H1738-2[2] Pinout/Color Code		Pinout
		Pin	Color	Pin	Color	
QDS-815C	4.51 m (15 ft)	1	Bn	1	Or	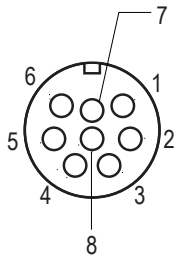
QDS-825C	7.62 m (25 ft)	2	Or/Bk	2	Bu	
QDS-850C	15.2 m (50 ft)	3	Or	3	Wh/Bk	
QDS-875C	22.9 m (75 ft)	4	Wh	4	Bk	
		5	Bk	5	Wh	
		6	Bu	6	Rd	
		7	Gn/Ye	7	Gn	
		8	Vi	8	Rd/Bk	

Unterminated bulk cable is available (UTB-3...C, UTB-5...C, UTB-8...C) in 25 ft, 50 ft, 100 ft, and 250 ft lengths. For more information, refer to *www.bannerengineering.com*.

STB Self-Checking Touch Button Replacement Parts

Model	Description	Product
STBVP6-78574	• Solid-state complementary PNP outputs • Polyetherimide upper housing • 300 mm (12 inches), 4-wire PVC-jacketed cable CE c UL US LISTED	

E-Stop Push-Button Components Replacement Parts

SSA-EBM-02L

Metal E-stop button with 2 normally closed (N.C.) contacts



8-LP2T-B6644

- 22.5 mm plastic button (mounting adapter sold separately)
- Twist to release, mechanical latching ISO 13850 (EN 418) compliant
- Diameter 40 mm (without mounting adapter)



[2] The SAE H1738-2 pin assignment and color codes are listed as a customer courtesy. The user must verify suitability of these cables for each application.

8-LM2T-AU120

Metal mounting adapter for metal button



8-LM2T-C01

- Normally closed (N.C.) positively driven contact element
- Direct (positive) opening operation per IEC/EN 60947-5-1



8-LM2T-C10

Normally open (N.O.) auxiliary contact element



8-LM2T-AU115

- 60 mm diameter
- Non-adhesive plastic legend with “Emergency Stop” inscription



Telescoping Stand Replacement Parts

Models	Description	Product
STBA-RB1-SGP	Quick-release gravity pin to allow rotation of Run Bar on telescoping stand. (Can also be used for quick height adjustment of stand.)	

Banner Engineering Corp Limited Warranty

Banner Engineering Corp. warrants its products to be free from defects in material and workmanship for one year following the date of shipment. Banner Engineering Corp. will repair or replace, free of charge, any product of its manufacture which, at the time it is returned to the factory, is found to have been defective during the warranty period. This warranty does not cover damage or liability for misuse, abuse, or the improper application or installation of the Banner product.

THIS LIMITED WARRANTY IS EXCLUSIVE AND IN LIEU OF ALL OTHER WARRANTIES WHETHER EXPRESS OR IMPLIED (INCLUDING, WITHOUT LIMITATION, ANY WARRANTY OF MERCHANTABILITY OR FITNESS FOR A PARTICULAR PURPOSE), AND WHETHER ARISING UNDER COURSE OF PERFORMANCE, COURSE OF DEALING OR TRADE USAGE.

This Warranty is exclusive and limited to repair or, at the discretion of Banner Engineering Corp., replacement. IN NO EVENT SHALL BANNER ENGINEERING CORP. BE LIABLE TO BUYER OR ANY OTHER PERSON OR ENTITY FOR ANY EXTRA COSTS, EXPENSES, LOSSES, LOSS OF PROFITS, OR ANY INCIDENTAL, CONSEQUENTIAL OR SPECIAL DAMAGES RESULTING FROM ANY PRODUCT DEFECT OR FROM THE USE OR INABILITY TO USE THE PRODUCT, WHETHER ARISING IN CONTRACT OR WARRANTY, STATUTE, TORT, STRICT LIABILITY, NEGLIGENCE, OR OTHERWISE.

Banner Engineering Corp. reserves the right to change, modify or improve the design of the product without assuming any obligations or liabilities relating to any product previously manufactured by Banner Engineering Corp.