

SEB 2600 G M4 rot/red

Measuring and Testing Equipment:Sockets:4 mm safety system

Product description	
Description	Safety built-in socket, 4 mm diameter, touch-protected, M 4 threaded connection and soldering hole, gold-plated brass. For installation into switchpanels and equipment chassis with wall thicknesses up to 6 mm. Accessory BES 1000. Installation hole: 12,2 mm diameter. Tightening torque: 50 Ncm
Type	SEB 2600 G M4 rot/red
Order No.	972 354-101
System	4 mm safety system
Housing Color	red
Other standard types	black color, order no. 972 354-100; blue color, order no. 972 354-102; yellow color, order no. 972 354-103; green color, order no. 972 354-104; yellow/green color, order no. 972 354-188

Drawing

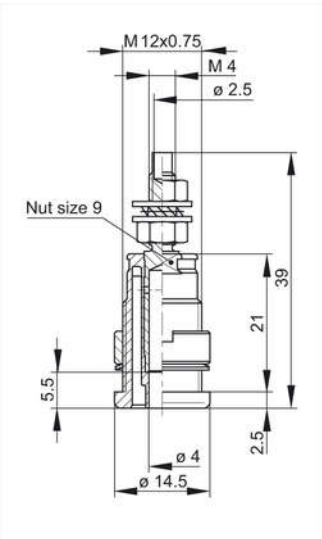

Technical data	
Type of contact	socket
Type of termination	screw / soldered
Standard	IEC 61010
Rated voltage	AC/DC 1000 V

Measurement Category	CAT II
Rated current	32 A
Contact resistance	5 mOhm
Mounting	screw
Material	
Contact material	brass
Contact surface material	gold-plated
Housing material	PA
Environmental conditions	
Temperature range	-40°C to +80°C
Inflammability class	
Housing	94 V-2