SUBMINIATURE — SEALED

E72/E73 Series

Features

- Moisture resistant
- 3 contact arrangements
- Long life coil spring mechanism
- Choice of button or hinged actuator
- 10″, 16 gauge leads attached
- Custom wire and harness designs available upon request

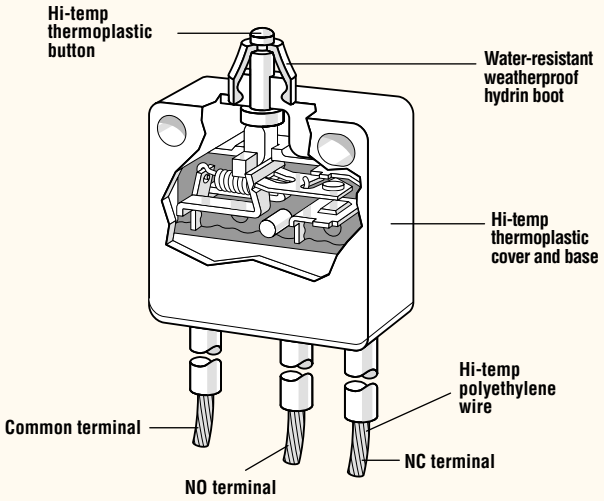

Electrical Ratings

Switch Series	EN61058 Rating	UL1054 Rating	Electrical Life at Rated Load According to VDE (Min. Operations)	Electrical Life at Rated Load According to UL (Min. Operations)
E72	N/A	10.1A, 1/4HP, 125/250VAC	N/A	6,000
E73	N/A	0.1A, 125VAC	N/A	6,000



Specifications

Electrical	
Temperature Rating:	-40° to +85°C
Flammability Rating:	UL94V-O
Materials	
Case:	Hi-Temp Thermoplastic Nylon
Boot:	Hydrin
Button:	Hi-Temp Thermoplastic Nylon
Actuator:	Stainless Steel
Potting:	Macromelt Polyamide
Contacts:	Silver Alloy *(E72)*, Gold Crosspoint *(E73)*

Dimensions inches (mm)

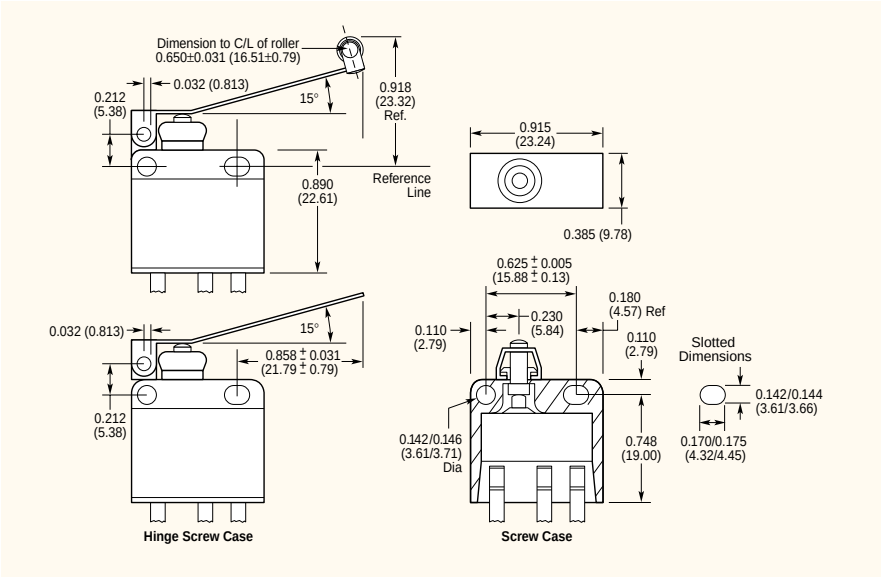

Characteristics inches (mm)

	-40AT	-40HT	-40KT
Max. Rest Position	0.390 (9.91)	0.972 (24.69)	1.041 (26.44)
Max. Pretravel	0.040 (1.02)	0.275 (6.99)	0.240 (6.10)
Operating Point	0.310 – 0.350 (7.87 – 8.99)	0.440 – 0.750 (11.18 – 19.05)	0.762 ± 0.125 (19.36 ± 3.18)
Min. Overtravel	0.035 (0.89)	0.100 (2.54)	0.125 (3.18)
Max. Movement Differential	0.004 (0.10)	0.024 (0.61)	0.025 (0.635)
Max. Operating Force	300 gms.	67 gms.	75 gms.

Mounting

Recommended screw size: #6-32 round head. Recommended torque on screw: 6 inch lbs. max.

Ordering Information

Actuator	Silver Contacts	Gold Contacts
Button	E72-40AT	E73-40AT
Lever	E72-40HT	E73-40HT
Roller	E72-40KT	E73-40KT