DATASHEET - MCS4



Pressure switches with auxiliary contacts, 7 bar, 1 changeover contact, IP65

Part no.	**MCS4**
Catalog No.	**019711**
Alternate Catalog No.	**MCS4**
EL-Nummer (Norway)	**4356105**

Delivery program

Note on use			This product complies with Low-Voltage Directive 2014/35/EC and EMC Directive 2014/30/EC and meets the requirements in EN 60947-5-1. This product does not meet the rail industry's standard requirements. Accordingly, the user must review it separately for the specific application at hand.
Product range			Pressure switches with auxiliary contacts
Degree of Protection			IP65
Contacts			1 changeover contact
Cut-in pressure and cut-out pressure: separate stepless adjustment. All the intersection points within the diagram area can be set.			
			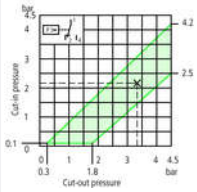
			Min. switching differential: 0.15 bar Example: Cut-out pressure 3.3 bar Cut-in pressure 2.2 bar
			Variable switching differential
Max. operating pressure		bar	7

Notes

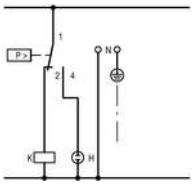

Features:

- Pressure pipe flange R ¼"
- If required: pressure pipe flange R ½"
- IP65 in conjunction with V-M20 cable gland
- 1 Insulated protective conductor terminal
- 2 cable entry knockouts for M20
- Neoprene membrane, resistant to aging, air, engine oil, and water min. -25 °C, max. +80 °C

Cut-in and cut-out pressures are factory-preset as specified with type suffix: →#203948

R ¼" corresponds to G ¼

R ½" corresponds to G ½ according to ISO 228-1

Auxiliary contact to IEC/EN 60947-1

Technical data

General

Standards			IEC/EN 60947-5-1
Test pressure		bar	32
Rupturing pressure		bar	90

Operating frequency	Operations/h		≦ 1500
Climatic proofing			Damp heat, constant, to IEC 60068-2-78 Damp heat, cyclic, to IEC 60068-2-30
Ambient temperature			-25 - 70
Degree of Protection			IP65
Mounting position			As required
Mechanical shock resistance to IEC 60068-2-27	Half-sinusoidal shock 20 ms	g	> 10
Vibration resistance acc. to IEC/EN 60068-2-6	Amplitude 1 mm	Hz	36
lifespan	Operations	x 10^6	1
Terminal capacities		mm^2	
Solid		mm^2	1 x (0.75 - 2.5) 2 x (0.75 - 1.5)
Flexible with ferrules to DIN 46228		mm^2	1 x (0.5 - 1.5)
Terminations			Tunnel terminal
Terminal screw			M3
Tightening torque of terminal screw		Nm	0.5

Contacts/switching capacity

Rated impulse withstand voltage	U_{imp}	V AC	4000
Rated insulation voltage	U_i	V	400
Overvoltage category/pollution degree			III/3
Max. short-circuit protective device			
Fuseless		Type	PKZM0-6,3
Fuse	gG/gL	A	10
AC-15			
Rated operational current			
230 V, 50/60Hz		A	2
DC-13			
Rated operational current			
24 V		A	2
110 V		A	0.25
Rated frequency	f	Hz	50

Design verification as per IEC/EN 61439

Technical data for design verification			
Operating ambient temperature min.		°C	-25
Operating ambient temperature max.		°C	70

Technical data ETIM 7.0

Low-voltage industrial components (EG000017) / Pressure switch (EC000243)

Electric engineering, automation, process control engineering / Low-voltage switch technology / Monitoring equipment (low-voltage switch technology) / Pressure monitoring equipment (ecl@ss10.0.1-27-37-18-14 [AKF108014])

Suitable as guard			Yes
Suitable as 2-point controller			Yes
Suitable as limiter			No
Max. operation pressure		hPa	7000
Engaging pressure		bar	0 - 4.2
Initial setting		hPa	0 - 0
Switch off pressure		bar	0 - 4.5
End setting		hPa	0 - 0
Pressure-switching differential		bar	0
Max. test pressure		bar	32
Bursting pressure		bar	90
Medium temperature		°C	25 - 80
Connection			Inner thread gas cylindrical (BSPP)

Thread size		1/4 inch
Rated voltage Ue at AC 50 Hz	V	0 - 230
Rated voltage Ue at AC 60 Hz	V	0 - 230
Rated voltage Ue at DC	V	0 - 110
Initial value measuring range pressure	Pa	0
End value measuring range pressure	Pa	0
Rated operation power at AC-3, 400 V	kW	0
Switching capacity at AC-3, 240 V	kA	0
Rated operation current Ie at AC-1, 400 V	A	0
Rated operation current Ie at AC-3, 400 V	A	0
Number of auxiliary contacts as normally open contact		0
Number of auxiliary contacts as normally closed contact		0
Number of auxiliary contacts as change-over contact		1
Type of electric connection		Screw connection
Number of normally closed contacts as main contact		0
Number of main contacts as normally open contact		0
Adjustable current range	A	0 - 0
With hand operation		No
With manual on/off switch		No
Electronic version		No
With display		No
Explosion-proof		No
Degree of protection (IP)		IP65
Degree of protection (NEMA)		Other
Height	mm	110
Width	mm	60
Diameter	mm	0
Depth	mm	96

Approvals

Product Standards		CSA-CC22.2 No. 14
CSA File No.		12528
CSA Class No.		3211-06
North America Certification		CSA certified

Dimensions

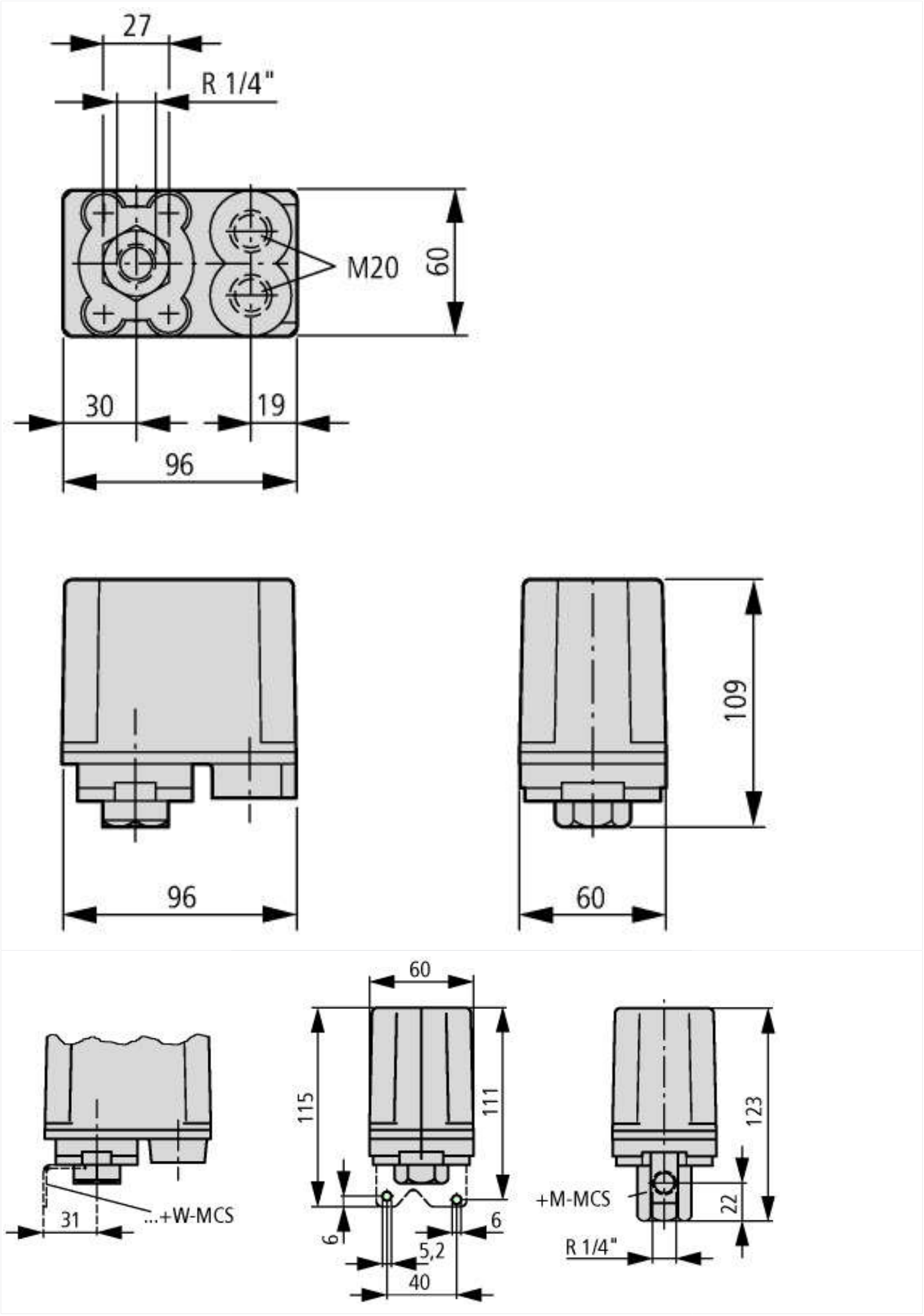
27
R 1/4"
M20
60
30
19
96
96
109
60
60
115
111
6
6
5,2
40
31
...+W-MCS
+M-MCS
123
22
R 1/4"

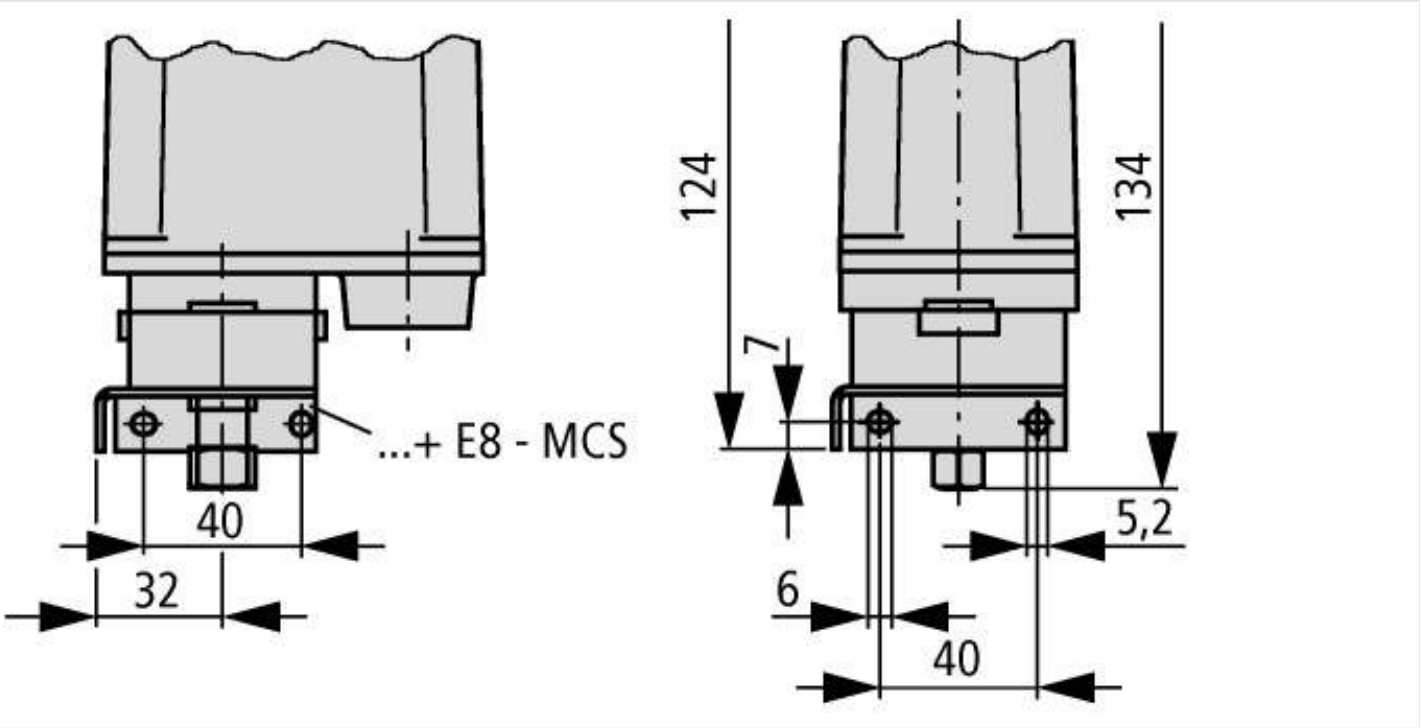

Additional product information (links)

IL05212001Z (AWA1320-0132) Pressure switch	
IL05212001Z (AWA1320-0132) Pressure switch	https://es-assets.eaton.com/DOCUMENTATION/AWA_INSTRUCTIONS/IL05212001Z2020_10.pdf

© 04/2021 by Eaton Industries GmbH