PG2409

Pressure sensor with analogue display

PG-1-1-REB12-MFRKG/US/ /P

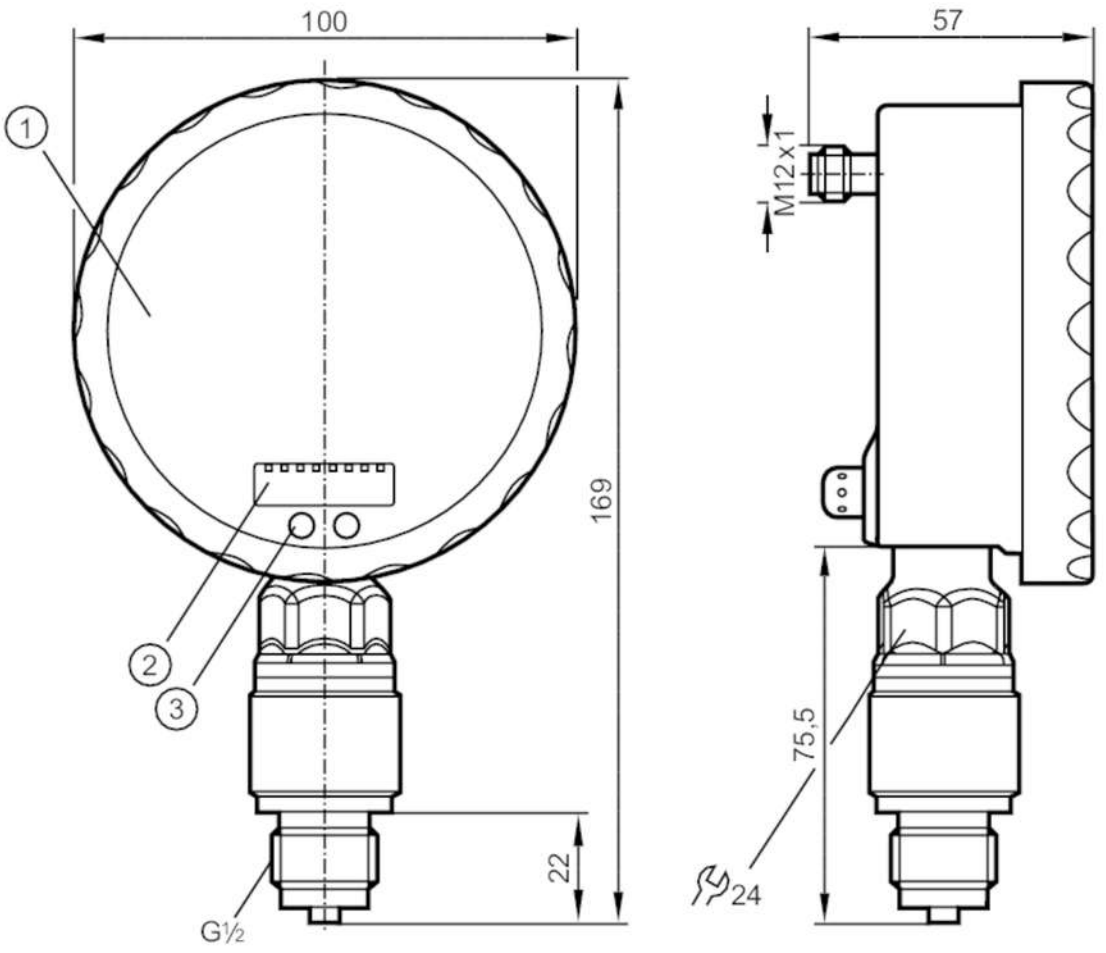

1 analogue display
2 alphanumeric display 4-digit
3 sensor field (programming button)

Product characteristics			
Number of inputs and outputs	Number of digital outputs: 1; Number of analogue outputs: 1		
Measuring range	-1...1 bar	-1000...1000 mbar	-14.52...14.52 psi
Process connection	threaded connection G 1/2 external thread		
Application			
Special feature	Gold-plated contacts		
Application	for industrial applications		
Media	liquids and gases		
Medium temperature [°C]	-25...80		
Min. bursting pressure	30 bar	435 psi	3 MPa
Pressure rating	10 bar	145 psi	1 MPa
Type of pressure	relative pressure; vacuum		
Electrical data			
Operating voltage [V]	18...32 DC		
Current consumption [mA]	< 70; (24 V)		
Min. insulation resistance [MΩ]	100; (500 V DC)		

PG2409

Pressure sensor with analogue display

PG-1-1-REB12-MFRKG/US/ /P

Protection class		III	
Reverse polarity protection		yes	
Power-on delay time	[s]	6	
Integrated watchdog		yes	
Inputs / outputs			
Number of inputs and outputs		Number of digital outputs: 1; Number of analogue outputs: 1	
Outputs			
Total number of outputs		2	
Output signal		switching signal; analogue signal; (configurable)	
Electrical design		PNP/NPN	
Number of digital outputs		1	
Output function		normally open / normally closed; (parameterisable)	
Max. voltage drop switching output DC	[V]	2	
Permanent current rating of switching output DC	[mA]	250	
Switching frequency DC	[Hz]	75	
Number of analogue outputs		1	
Analogue current output	[mA]	4...20, invertible; (scalable)	
Max. load	[Ω]	(Ub - 10 V) / 20 mA	
Short-circuit protection		yes	
Type of short-circuit protection		pulsed	
Overload protection		yes	
Measuring/setting range			
Measuring range		-1...1 bar	-1000...1000 mbar	-14.52...14.52 psi
Set point SP		-0.992...1.6 bar	-14.4...23.22 psi
Reset point rP		-1...1.592 bar	-14.52...23.1 psi
Analogue start point		-1...1.1 bar	-14.52...15.96 psi
Analogue end point		-0.5...1.6 bar	-7.26...23.22 psi
In steps of		0.004 bar	0.06 psi
Accuracy / deviations			
Switch point accuracy	[% of the span]	< ± 0,5; (Turn down 1:1)	
Repeatability	[% of the span]	< ± 0,1; (with temperature fluctuations < 10 K; Turn down 1:1)	
Characteristics deviation	[% of the span]	< ± 0,25 (BFSL) / < ± 0,5 (LS); (Turn down 1:1; BFSL = Best Fit Straight Line)	
Hysteresis deviation	[% of the span]	< ± 0,25; (Turn down 1:1)	
Long-term stability	[% of the span]	< ± 0,1; (Turn down 1:1; per 6 months)	
Temperature coefficient zero point	[% of the span / 10 K]	< ± 0,2; (0...70 °C)	
Temperature coefficient span	[% of the span / 10 K]	< ± 0,2; (0...70 °C)	

PG2409

Pressure sensor with analogue display

PG-1-1-REB12-MFRKG/US/ /P

Response times			
Response time	[ms]	< 9	
Damping process value dAP	[s]	0.01...30	
Damping for the analogue output dAA	[s]	0.01...30	
Step response time analogue output	[ms]	28	
Operating conditions			
Ambient temperature	[°C]	-20...80	
Storage temperature	[°C]	-40...100	
Protection		IP 67; IP 69K	
Tests / approvals			
EMC		EN 61000-4-2 ESD	4 kV CD / 8 kV AD
		EN 61000-4-3 HF radiated	10 V/m
		EN 61000-4-4 Burst	2 kV
		EN 61000-4-5 Surge	0,5/1 kV
		EN 61000-4-6 HF conducted	10 V
Shock resistance		DIN IEC 68-2-27	50 g (11 ms)
Vibration resistance		DIN IEC 68-2-6	20 g (10...2000 Hz)
MTTF	[years]	103	
Pressure Equipment Directive		Sound engineering practice; can be used for group 2 fluids; group 1 fluids on request	
Mechanical data			
Weight	[g]	565.2	
Dimensions	[mm]	169 x 100 x 57	
Materials		stainless steel (316L/1.4404); PA; FKM; PTFE; viewing glass: laminated safety glass 4 mm	
Materials (wetted parts)		Al2O3 (ceramics); FKM; stainless steel (316L/1.4404)	
Min. pressure cycles		100 million	
Process connection		threaded connection G 1/2 external thread	
Restrictor element integrated		no (can be retrofitted)	
Displays / operating elements			
Display		Display unit	2 x LED, green
		switching status	LED, yellow
		switch points	LED ring, red
		function display	alphanumeric display, red 4-digit
		measured values	analogue display, 0...350° rotatable, pointer not visible when unit disconnected
		measured values	alphanumeric display, red 4-digit
With scale		yes	
Extended display range (max.)		1.6 bar	23.22 psi
Remarks			
Remarks		switch point accuracy in the extended display range: 1.5 % of the span	
Pack quantity		1 pcs.	

PG2409

Pressure sensor with analogue display

PG-1-1-REB12-MFRKG/US/ /P

Electrical connection

Connector: 1 x M12; coding: A; Contacts: gold-plated

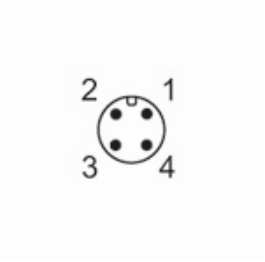

Connection

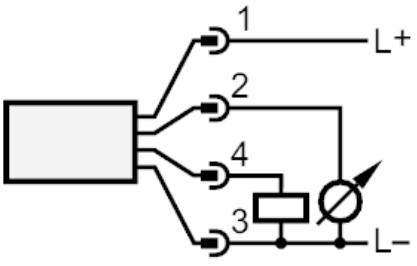

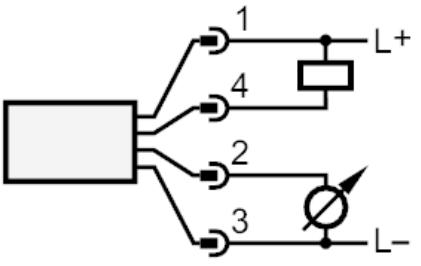

OUT1	switching output
OUT2	analogue output