Inductive Sensors

BES 516-300-S162-S4-D
Order Code: BHS0021

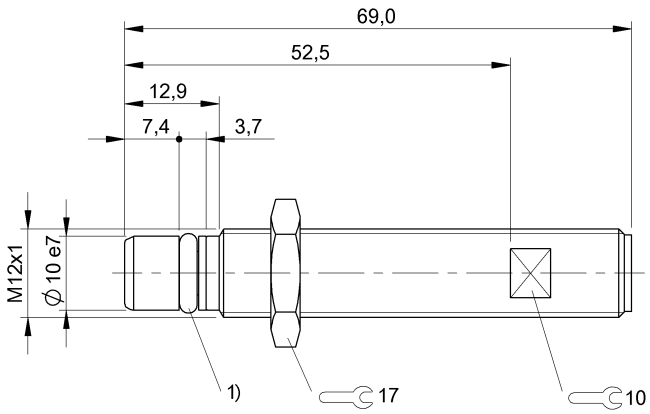

1) O-Ring with thrust ring

Basic features

Approval/Conformity	CE cULus EAC WEEE
Basic standard	IEC 60947-5-2

Display/Operation

Function indicator	no
Power indicator	no

Electrical connection

Connection	M12x1-Male, 4-pin, A-coded
Polarity reversal protected	yes
Protection against device mix-ups	yes
Short-circuit protection	yes

Electrical data

Load capacitance max. at Ue	1 µF
Min. operating current Im	0 mA
No-load current Io max., damped	8 mA
No-load current Io max., undamped	3 mA
Operating voltage Ub	10...30 VDC
Output resistance Ra	150.0 kOhm
Rated insulation voltage Ui	75 V DC
Rated operating current Ie	200 mA
Rated operating voltage Ue DC	24 V
Rated short circuit current	100 A
Ready delay tv max.	50 ms
Residual current Ir max.	10 µA
Ripple max. (% of Ue)	15 %
Switching frequency	2000 Hz
Utilization category	DC -13
Voltage drop static max.	2.1 V

Environmental conditions

Ambient temperature	-25...80 °C
Contamination scale	3
EN 60068-2-27, Shock	Half-sinus, 30 g_n, 11 ms
EN 60068-2-6, Vibration	55 Hz, amplitude 1 mm, 3x30 min
IP rating	IP68

Functional safety

MTTF (40 °C)	855 a

Inductive Sensors

BES 516-300-S162-S4-D
Order Code: BHS0021

Interface

Switching output	PNP normally open (NO)

Material

Housing material	Stainless steel
Material sensing surface	EP
Support ring material	PTFE

Mechanical data

Dimension	Ø 12 x 69 mm
Installation	for flush mounting
Mounting part	M12x1
Pressure rating max.	500 bar
Pressure rating, note	oil pressure rated
Sealing ring, size	5.3 × 2.4 mm
Size	M12x1
Tightening torque	15 Nm ±10 %

Range/Distance

Assured operating distance Sa	1.2 mm
Hysteresis H max. (% of Sr)	15.0 %
Rated operating distance Sn	1.5 mm
Real switching distance sr	1.5 mm
Repeat accuracy max. (% of Sr)	5.0 %
Temperature drift max. (% of Sr)	10 %
Tolerance Sr	±10 %

Remarks

The sensor is functional again after the overload has been eliminated.
Installation Instructions 614804
For more information about MTTF and B10d see MTTF / B10d Certificate

Indication of the MTTF- / B10d value does not represent a binding composition and/or life expectancy assurance; these are simply experiential values with no warranty implications. These declared values also do not extend the expiration period for defect claims or affect it in any way.

Connector Drawings



Wiring Diagrams

