RFID OsiSense XG

Smart Antenna
User Manual

(Original Document)

09/2016



W91655690111.06

www.tesensors.com

Telemecanique
Sensors

The information provided in this documentation contains general descriptions and/or technical characteristics of the performance of the products contained herein. This documentation is not intended as a substitute for and is not to be used for determining suitability or reliability of these products for specific user applications. It is the duty of any such user or integrator to perform the appropriate and complete risk analysis, evaluation and testing of the products with respect to the relevant specific application or use thereof. Neither Schneider Electric nor any of its affiliates or subsidiaries shall be responsible or liable for misuse of the information contained herein. If you have any suggestions for improvements or amendments or have found errors in this publication, please notify us.

No part of this document may be reproduced in any form or by any means, electronic or mechanical, including photocopying, without express written permission of Schneider Electric.

All pertinent state, regional, and local safety regulations must be observed when installing and using this product. For reasons of safety and to help ensure compliance with documented system data, only the manufacturer should perform repairs to components.

When devices are used for applications with technical safety requirements, the relevant instructions must be followed.

Failure to use Schneider Electric software or approved software with our hardware products may result in injury, harm, or improper operating results.

Failure to observe this information can result in injury or equipment damage.

© 2016 Schneider Electric. All Rights Reserved.

Table of Contents

	Safety Information	5
	About the Book	7
Chapter 1	**General Information**	9
	System Presentation	10
	Exchange Principle	11
	Equipment in the OsiSense® XG Range	12
Chapter 2	**Installing the System**	13
	Defining the System Environment	14
	Setting Up the Smart Antenna	19
	Connecting the Smart Antennas	25
	Wiring a Modbus Network	27
	Wiring an Ethernet Modbus TCP/IP Network	29
	Connecting a TCSAMT31FP Splitter Box	30
Chapter 3	**Setting the System Parameters**	33
	Setting the Smart Antenna Parameters	34
	Setting the PLC Parameters	37
Chapter 4	**Operating Principles**	39
	Memory Zones	40
	Smart Antenna System Memory Zone	41
	Smart Antenna Command/Instructions Memory Zone	43
	Tag Memory Zone	50
Chapter 5	**Communicating with the Modbus Protocol**	51
	General	52
	Requests	54
	Programming	58
Chapter 6	**Diagnostics**	61
	Diagnosing a Fault	61
Chapter 7	**Wiring Examples / FAQs**	63
	Wiring Examples	64
	FAQ	69
	M221 Programming Example	74
Glossary		77

Safety Information

Important Information

NOTICE

Read these instructions carefully, and look at the equipment to become familiar with the device before trying to install, operate, service, or maintain it. The following special messages may appear throughout this documentation or on the equipment to warn of potential hazards or to call attention to information that clarifies or simplifies a procedure.



The addition of this symbol to a “Danger” or “Warning” safety label indicates that an electrical hazard exists which will result in personal injury if the instructions are not followed.



This is the safety alert symbol. It is used to alert you to potential personal injury hazards. Obey all safety messages that follow this symbol to avoid possible injury or death.

⚠ DANGER

DANGER indicates a hazardous situation which, if not avoided, **will result in** death or serious injury.

⚠ WARNING

WARNING indicates a hazardous situation which, if not avoided, **could result in** death or serious injury.

⚠ CAUTION

CAUTION indicates a hazardous situation which, if not avoided, **could result** in minor or moderate injury.

NOTICE

NOTICE is used to address practices not related to physical injury.

PLEASE NOTE

Electrical equipment should be installed, operated, serviced, and maintained only by qualified personnel. No responsibility is assumed by Schneider Electric for any consequences arising out of the use of this material.

A qualified person is one who has skills and knowledge related to the construction and operation of electrical equipment and its installation, and has received safety training to recognize and avoid the hazards involved.

About the Book

At a Glance

Document Scope

This guide describes how to use OsiSense XG Smart Antenna and associated accessories.

Validity Note

This document is applicable to OsiSense® XG, version ≥ 3.9.

The technical characteristics of the devices described in this manual also appear online. To access this information online:

Step	Action
1	Go to the Telemecanique Sensors home page *www.tesensors.com*.
2	In the **Search** box, type the model number of a product or the name of a product range. ● Do not include blank spaces in the model number/product range. ● To get information on a grouping similar modules, use asterisks (*).
3	If you entered a model number, go to the **Product datasheets** search results and click the model number that interests you. If you entered the name of a product range, go to the **Product Ranges** search results and click the product range that interests you.
4	If more than one model number appears in the **Products** search results, click the model number that interests you.
5	Depending on the size of your screen, you may need to scroll down to see the data sheet.
6	To save or print a data sheet as a .pdf file, click **Download product datasheet**.

The characteristics that are presented in this manual should be the same as those characteristics that appear online. In line with our policy of constant improvement, we may revise content over time to improve clarity and accuracy. If you see a difference between the manual and online information, use the online information as your reference.

Product Related Information

⚠ WARNING

UNINTENDED EQUIPMENT OPERATION

- The application of this product requires expertise in the design and programming of control systems. Only persons with such expertise should be allowed to program, install, alter, and apply this product.
- Follow all local and national safety codes and standards.

Failure to follow these instructions can result in death, serious injury, or equipment damage.

Related Documents

Title of documentation	Reference number
XGST2020 Terminal XG - Quick Start Guide	HRB34094
XGST2020 Handheld Terminal - Software Guide	EIO0000002166 (ENG), EIO0000002167 (FRE)
Splitter box, Ethernet Modbus TCP/IP - User Guide	1655668 04 (ENG/FRE)
Splitter box, PROFIBUS-DP - User Guide	EIO0000000046 (ENG) EIO0000000047 (FRE) EIO0000000768 (SPA)
Splitter box, EtherNet/IP - User Guide	EIO0000000867 (ENG), EIO0000000868 (FRE), EIO0000000869 (SPA)

You can download these technical publications and other technical information from our website at *www.tesensors.com*.

QR Code

A QR code including the Telemecanique Sensors web address is present on theSmart Antenna. Technical files and documents are available in this website.



http://www.qr.tesensors.com/XG0003

User Comments

We welcome your comments about this document. You can reach us by e-mail at customersupport@tesensors.com.

Chapter 1
General Information

Aim of This Chapter

This chapter presents the OsiSense XG Smart Antennas and the associated range of equipment.

What Is in This Chapter?

This chapter contains the following topics:

Topic	Page
System Presentation	10
Exchange Principle	11
Equipment in the OsiSense® XG Range	12

System Presentation

Definition of RFID

RFID is the use of radio transmission to identify and locate objects.

An RFID system is based on three main components:
- A reader (read/write station)
- A radio antenna
- An electronic tag

Operation of an RFID System

The tag is attached on, or in, the object to be tracked or identified. There is no contact with the reader. This means that the tag can be placed inside objects (boxes, bags, and so on…) and that the reader can be positioned behind a protective screen, as long as the materials are not metallic.

When a tag enters the field generated by the reader, it detects the signal and exchanges the data (read or write) between its memory and the reader.

Presentation of the Offer OsiSense XG

OsiSense XG is an RFID system offering:
- Traceability and tracking of items
- Flexibility of production systems
- Various types of access control

An open system:
- System compatible with tags that comply with standards ISO 14443 and ISO 15693
- Modbus, Modbus TCP/IP, EtherNet/IP, and Profibus protocols.

A simple system:
- No station programming
- Data formatted in accordance with PLC standards (16-bit registers)
- Automatic configuration of communication parameters (speed, format, and so on…)
- Quick wiring using M12 connectors
- Extensive range of cables and mounting accessories,
- Possibility of using metal supports

Integrated system:
- Reader, radio antenna, and network functionalities in the same box,
- The smallest industrial RFID reader

Exchange Principle

Presentation

The Smart Antenna is used to send information from the tag to the PLC and vice versa, as described below:

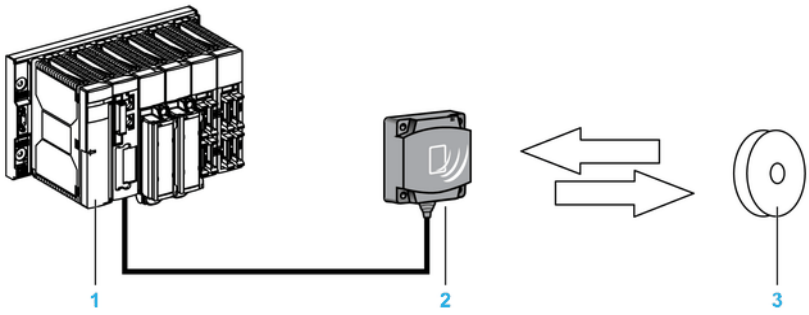

Phases in the Process

The table shows the various exchange phases:

Phase	Exchanges	
	PLC Smart Antenna	Smart Antenna Tag
1		Look for a tag in the dialog zone →
2		Positive response ←
3	Send a read/write command →	
4		Execution of the command (with checks) ↔
5	Send back report ←	

NOTE:

- If phase 3 is carried out with no tag present, a detected error message is sent back to the PLC.
- If a detected error occurs in phase 4, this phase is automatically restarted (up to 3 times). If a detected error is still detected at the end of phase 4, a detected error report is sent back in phase 5.

Equipment in the OsiSense® XG Range

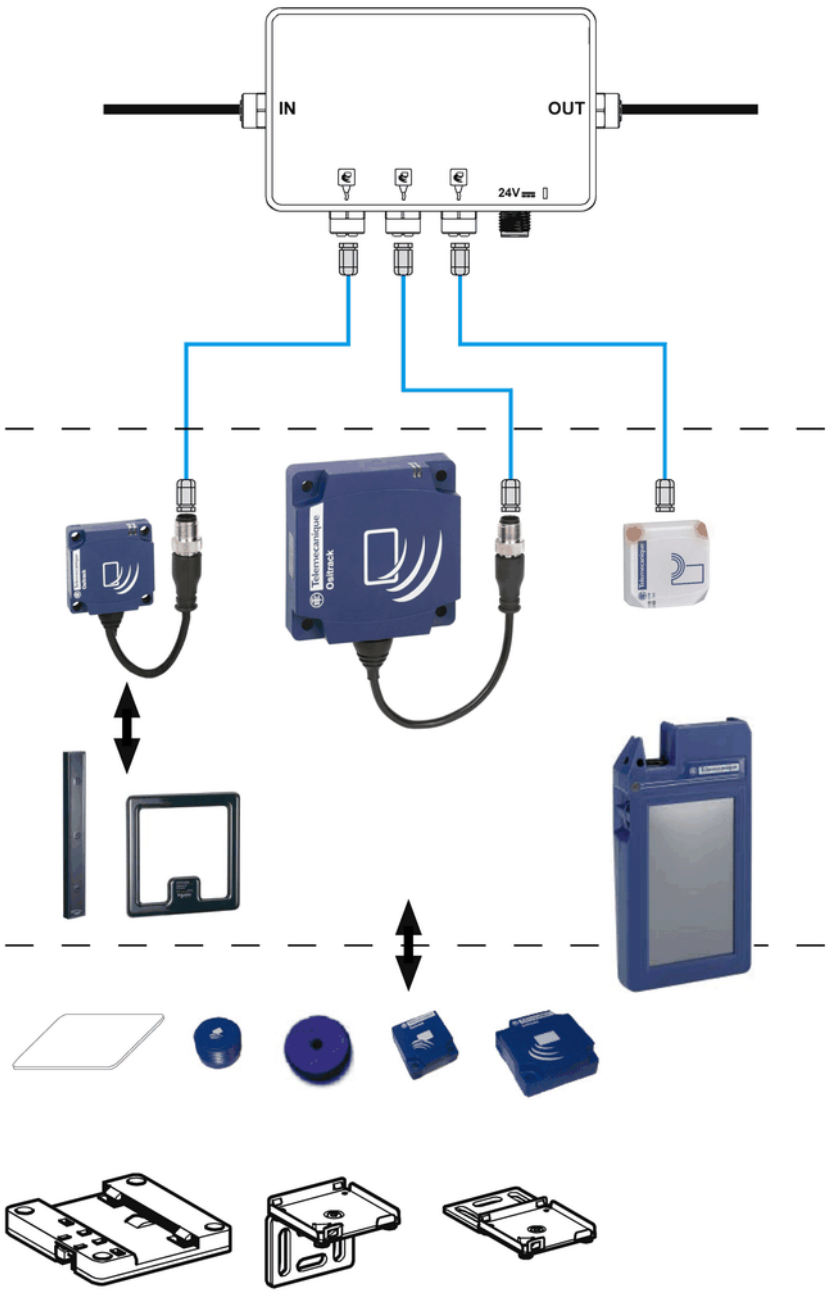

Wiring via M12 connector:

- Splitter boxes suitable for Schneider Electric networks (Modbus, Profibus, Ethernet Modbus TCP/IP, EtherNet/IP)
- Network powered between the Smart Antennas and the splitter box
- Range of cables

Smart Antennas incorporating all the RFID and network functions in the same unit.

Industrial tags

Mounting

Chapter 2
Installing the System

Aim of This Chapter

This chapter describes the procedure for installing the OsiSense XG Smart Antenna.

What Is in This Chapter?

This chapter contains the following topics:

Topic	Page
Defining the System Environment	14
Setting Up the Smart Antenna	19
Connecting the Smart Antennas	25
Wiring a Modbus Network	27
Wiring an Ethernet Modbus TCP/IP Network	29
Connecting a TCSAMT31FP Splitter Box	30

Defining the System Environment

Smart Antenna Characteristics

The table gives the technical characteristics of the Smart Antennas:

Characteristics		XGCS4901201 - format 40	XGCS8901201 - format 80	XGCS490B201	XGCS49LB201
Temperature	Operation	-25…+70°C (-13…158°F)		-40…+70°C (-40…158°F)	
	Storage	-40…+85 °C (-40…+185°F)		-40…+85 °C (-40…+185°F)	
Degree of protection		IP65 in accordance with IEC60529			IP69K on front faceIP65 on back part
Vibration resistance EN 60068.2.27 EN 60068.2.6		2 mm (0.078 in) from 5 to 29.5 Hz / 7 g (7 gn) from 29.5 to 150 Hz 30 g (30 gn) / 11 ms			
Resistance to mechanical shocks		IK04 according to EN 50102		IK04 according to EN 50102	
Standards / Certifications		CE, cULus, EN 300330-1/2, EN 301489-01/03, FCC Part 15 IC			
Immunity to disturbances		Resistance to electrostatic discharges, radiated electromagnetic fields, fast transients, electrical surges, conducted and induced interference and power frequency magnetic field according to IEC 61000/EN 55022.			
Unit dimensions		40x40x15 mm (1.57x1.57x0.59 in)	80x80x26 mm (3.15x3.15x1.02 in)	40x40x15 mm (1.57x1.57x0.59 in) Mounting ø22 mm (0.87 in)	
RFID frequency		13.56 MHz			
Type of associated tags		Standardized ISO 15693 and ISO 14443 tags Automatic detection of the tag type			
Nominal sensing distance (according to the associated tag)		18…70 mm (0.70…2.75 in)	20…100 mm (0.78…3.94 in)	10…70 mm (0.39…2.75 in)	
Nominal power supply		24 Vdc PELV			
Power supply voltage limits		19.2…29 V ripple included			
Power consumption		< 60 mA			
Serial links	Type	RS485			
	Protocol	Modbus RTU			
	Speed	9600…115 200 Bauds: Automatic detection			
Display		1 dual color LED for network communication 1 dual color LED for RFID communication (Tag present, Smart Antenna/tag dialog)			
Lights		-			2 Multicolor lights (7 colors)
Connection		5-way male M12 connector for connection to the communication network and power supply			
Tightening torque for the mounting		< 1 Nm (8.85 lbf-in)	< 3 Nm (26.55 lbf-in)	< 2.2 Nm (19.5 lbf-in)	

NOTE: The developer is not responsible for any radio or TV interference caused by unauthorized modifications on this material. Such modifications are likely to cancel the rights to use the material.

WARNING TO USERS IN THE UNITED STATES AND CANADA

WARNING TO USERS IN THE UNITED STATES

Federal Communication Commission Interference Statement

47 CFR Section 15.105(b)

This equipment has been tested and found to comply with the limits for a Class B digital device, pursuant to Part 15 of the FCC Rules. These limits are designed to provide reasonable protection against harmful interference in a residential installation. This equipment generates uses and can radiate radio frequency energy and, if not installed and used in accordance with the instructions, may cause harmful interference to radio communications. However, there is no guarantee that interference will not occur in a particular installation.

If this equipment does cause harmful interference to radio or television reception, which can be determined by turning the equipment off and on, the user is encouraged to try to correct the interference by one of the following measures:

- Reorient or relocate the receiving antenna.
- Increase the separation between the equipment and receiver.
- Connect the equipment into an outlet on a circuit different from that to which the receiver is connected.
- Consult the dealer or an experienced radio/TV technician for help.

This device Equipment name complies with Part 15 of the FCC Rules. Operation is subject to the following two conditions:

1. This device may not cause harmful interference.
2. This device must accept any interference received, including interference that may cause undesired operation.

NO UNAUTHORIZED MODIFICATIONS

47 CFR Section 15.21

CAUTION: This equipment may not be modified, altered, or changed in any way without signed written permission from SCHNEIDER ELECTRIC. Unauthorized modification may void the equipment authorization from the FCC and will void the SCHNEIDER ELECTRIC warranty.

WARNING TO USERS IN THE CANADA / *ATTENTION POUR LES UTILISATEURS AU CANADA*

This device complies with Industry Canada licence-exempt RSS standard(s). Operation is subject to the following two conditions:

1. this device may not cause interference, and
2. this device must accept any interference received, including interference that may cause undesired operation of the device.

Under Industry Canada regulations, this radio transmitter may only operate using an antenna of a type and maximum (or lesser) gain approved for the transmitter by Industry Canada. To reduce potential radio interference to other users, the antenna type and its gain should be so chosen that the equivalent isotropically radiated power (e.i.r.p.) is not more than that necessary for successful communication.

Le présent appareil est conforme aux CNR d'Industrie Canada applicables aux appareils radio exempts de licence. L'exploitation est autorisée aux deux conditions suivantes :

1. *il ne doit pas produire de brouillage, et*
2. *l'utilisateur du dispositif doit être prêt a accepter tout brouillage radioélectrique reçu, même si ce brouillage est susceptible de compromettre le fonctionnement du dispositif.*

Conformément à la réglementation d'Industrie Canada, le présent émetteur radio peut fonctionner avec une antenne d'un type et d'un gain maximal (ou inférieur) approuvé pour l'émetteur par Industrie Canada. Dans le but de réduire les risques de brouillage radioélectrique à l' intention d'autres utilisateurs, il faut choisir le type d'antenne et son gain de sorte que la puissance isotrope rayonnée équivalente (p.i.r.e.) ne dépasse pas l'intensité nécessaire à l'établissement d'une communication satisfaisante.

References:

	XGCS4901201	XGCS8901201	XGCS490B201	XGCS49LB201
FCC ID	TW6XGCS4	TW6XGCS8	TW6XGCS4	TW6XGCS4
IC info	7002B-XGCS4	7002B-XGCS8	7002B-XGCS4	7002B-XGCS4

Tag Characteristics

The table gives the technical characteristics of the tags with EEPROM memory:

Type of Tag		XGHB-123345	XGHB-444345	XGHB-320345	XGHB-221346	XGHB-211345	XGHB-520246
Operation temperature		–25…+70 °C (–13…+158 °F)					–25…+85 °C (–13…+185°F)
Storage temperature		–40…+85 °C (–40…+185 °F)					–40…+90 °C (–40…+194 °F)
Degree of protection		IP68		IP65	IP68		IP68
Standards supported		ISO 15693	ISO 14443	ISO 15693			
Vibration resistance EN 60068.2.27 EN 60068.2.6		2 mm (0.078 in) from 5 to 29.5 Hz / 7 g (7 gn) from 29.5 to 150 Hz 30 g (30 gn) / 11 ms					
Resistance to mechanical shocks		IK02 according to EN 50102					
Dimensions		∅ 12x8 mm (0.47x0.31 in)	40x40x15 mm (1.57x1.57x 0.59 in)	∅ 30x3 mm (1.18x0.12 in)	26x26x13 mm (1.02x1.02x 0.51 in)	∅ 18 mm (0.70 in)	∅ 50x3 mm (1.97x0.12 in)
Casing materials		PBT		PC	PBT		PPA
Mounting method		Glued	Screw or clip	Screw	Screw or clip	Threaded hole	Screw
Tightening torque for the mounting screws		-	< 1 Nm (8.85 lbf-in)				
Memory capacity (bytes)		304	3 408	112	256	256	112
Type of memory		EEPROM					
Type of operation		Read/write					
Nominal sensing distance (read/write)	XGCS4	10 mm (0.39 in)	33 mm (1.30 in.)	48 mm (1.89 in.)	40 mm (1.57 in.)	18 mm (0.70 in.)	70 mm (2.75 in.)
	XGCS8	20 mm (0.78 in)	48 mm (1.89 in)	65 mm (2.56 in)	55 mm (2.16 in)	20 mm (0.78 in)	100 mm (3.94 in)
Number of read cycles		Unlimited					
Number of write cycles		100000 provided over the entire temperature range					
Number of write cycles at 30 °C *(86 °F)*		2.5 million typical cases					
Read/write time		Read/write time *(see page 50)*					
Retention period		10 years					

The table gives the technical characteristics of the portable tags with EEPROM memory:

Type of Tag	XGHBPB3345	XGHB90E340
Operation temperature	–5…+80 °C (23…+176°F)	–25…+50 °C (–13…+122°F)
Storage temperature	–25…+80 °C (-13…+176°F)	–40…+55 °C (–40…+131°F)
Degree of protection	IP67	IP65
Standards supported	ISO 14443	ISO 15693
Vibration resistance EN 60068.2.27 EN 60068.2.6	2 mm (0.078 in) from 5 to 29.5 Hz / 7 g (7 gn) from 29.5 to 150 Hz 30 g (30 gn) / 11 ms	
Resistance to mechanical shocks	IK02 according to EN 50102	
Dimensions	40x31x4.8 mm (1.57x1.22x0.189 in)	58x85.5x1 mm (2.28x3.34x0.039 in)
Casing materials	PC	PVC
Mounting method	-	-
Tightening torque for the mounting screws	-	-
Memory capacity (bytes)	736	256

Type of Tag		XGHBPB3345	XGHB90E340
Type of memory		EEPROM	
Type of operation		Read/write	
Nominal sensing distance (read/write)	XGCS4	30 mm (1.18 in)	70 mm (2.75 in)
	XGCS8	45 mm (1.77 in)	100 mm (3.94 in)
Number of read cycles		Unlimited	
Number of write cycles		100000 provided over the entire temperature range	
Number of write cycles at 30 °C *(86 °F)*		2.5 million typical cases	
Retention period		10 years	

The table gives the technical characteristics of the tags with FeRAM memory:

Type of Tag		XGHB320246	XGH440245	XGH440845	XGHB441645	XGHB443245
Operation temperature		–25...+70 °C (–13...+158 °F)				
Storage temperature		–40...+85 °C (–40...+185 °F)				
Degree of protection		IP65	IP68			
Standards supported		ISO 15693		ISO 14443		
Vibration resistance EN 60068.2.27 EN 60068.2.6		2 mm (0.078 in) from 5 to 29.5 Hz / 7 g (7 gn) from 29.5 to 150 Hz 30 g (30 gn) / 11 ms				
Resistance to mechanical shocks		IK02 according to EN 50102				
Dimensions		∅ 30x3 mm (1.18x0.12 in)	40x40x15 mm (1.57x1.57x0.59 in)			
Casing materials		PC	PBT			
Mounting method		Screw	Screw or clip			
Tightening torque for the mounting screws		< 1 Nm *(8.85 lbf-in)*				
Memory capacity (bytes)		2 000	2 000	8 192	16 384	32 768
Type of memory		FeRAM				
Type of operation		Read/write				
Nominal sensing distance (read/write)	XGCS4	45 mm (1.77 in)		25 mm (0.98 in)		
	XGCS8	65 mm (2.56 in)		39 mm (1.53 in)		
Number of read cycles		Unlimited				
Number of write cycles		10^{10} provided over the entire temperature range				
Number of write cycles at 30 °C *(86 °F)*		Read/Write time				
Read/write time		10 years				

Splitter Box Characteristics

The splitter boxTCSAMT31FP is used to connect 1 to 3 Smart Antennas to an RS485 network, ensuring distribution of the power supply.

Data is exchanged with the OsiSense® XG Smart Antennas using the Modbus protocol.

The following table contains the technical characteristics of the TCSAMT31FP splitter box:

Characteristics	
Storage temperature	-40…+85°C (-40…+185°F)
Operating temperature	-25…+55°C (-13…+131°F)
Degree of protection	IP65
Power supply	24 Vdc PELV (19.2…29 V including ripple)
Smart Antenna	5-way female M12 connector

Characteristics	
Conformity to standards	CE
LED indicators	Power supply (green)

The XGSZ33ETH splitter box performs the same functions using the Modbus TCP/IP protocol. For further information, refer to the Splitter box, Ethernet Modbus TCP/IP - User Guide *(see page 8)*.

The XGSZ33PDP splitter box performs the same functions using the PROFIBUS-DP protocol. For further information, refer to the Splitter box, PROFIBUS-DP - User Guide *(see page 8)*.

The XGSZ33EIP splitter box performs the same functions using the EtherNet/IP protocol. For further information, refer to the Splitter box, EtherNet/IP - User Guide *(see page 8)*.

Setting Up the Smart Antenna

Presentation of the Smart Antennas

XGCS8901201:



XGCS4901201:



XGCS490B201:



XGCS49LB201:



No.	Description
1	TAG: Tag LED
2	COM: Communication LED

For further information on the LED function, see Diagnostics *(see page 61)*.

Smart Antenna Dimensions

The figure shows the dimensions of the Smart Antennas XGCS4901201/XGCS8901201:

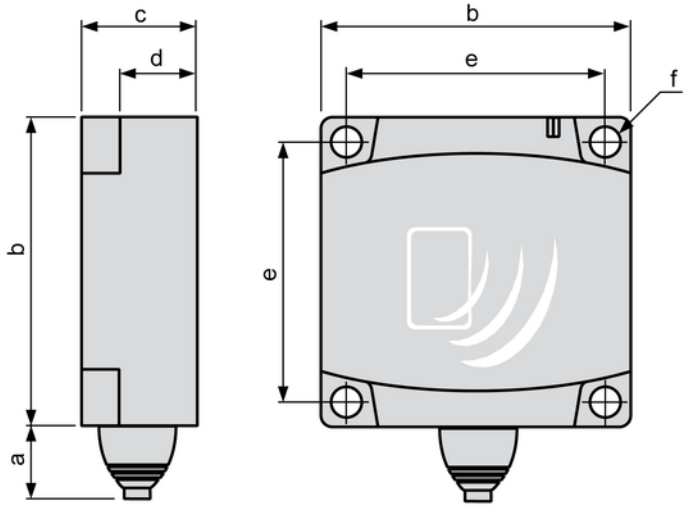

Dimensions in mm *(inches)*:

	a	b	c	d	e	f
XGCS4901201	14 (0.55)	40 (1.57)	15 (0.59)	9.8 (0.38)	33 (0.38)	ø4.5 (0.38)
XGCS8901201		80 (3.15)	26 (1.02)	16 (0.63)	65 (0.38)	ø5.5 (0.38)

The figure shows the dimensions of the Smart Antennas XGCS49•B201 in mm *(inches)*:

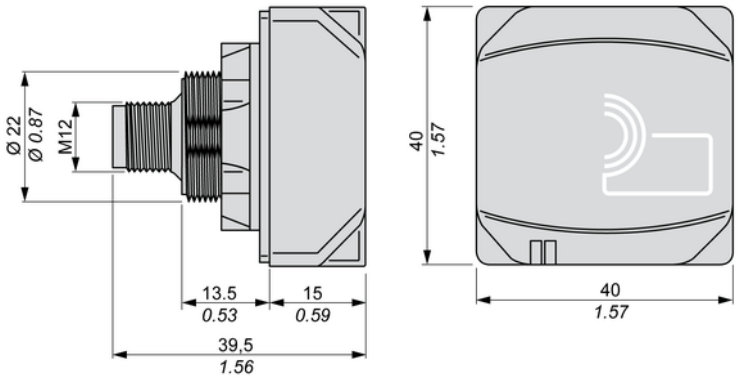

Distances Between Smart Antennas

When 2 Smart Antennas are too close, there is a risk of mutual disturbance.

NOTICE
UNINTENDED OPERATION Follow the installation precautions given below on distances between 2 Smart Antennas. **Failure to follow these instructions can result in equipment damage.**

Distances between two identical Smart Antennas depend on the tag used:

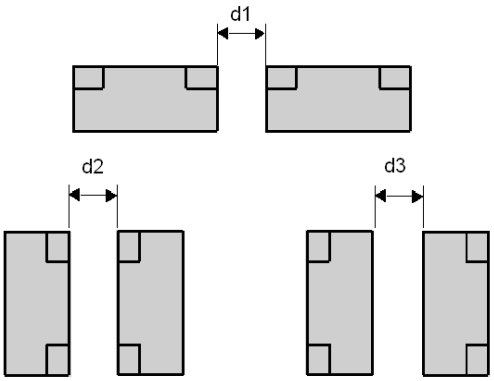

Minimum distances in mm (inches):

Tag reference	Minimum Distances in mm (inches)					
	XGCS4901201 XGCS49•B201			XGCS8901201		
	d1	d2	d3	d1	d2	d3
XGHB90E340 XGHB520246	310 (12.20)	550 (21.65)	120 (4.72)	430 (16.92)	750 (29.52)	280 (11.02)
XGHB221346	200 (7.87)	320 (12.59)	100 *3.93)*	280 (11.02)	530 (20.86)	260 (10.23)
XGHB320••• XGHBPB3345	140 (5.51)	360 (14.17)	110 (4.33)	310 (12.20)	540 (21.25)	240 (9.44)
XGHB211345 XGHB123345	210 (8.26)	180 (7.08)	60 (2.36)	200 (7.87)	370 (14.56)	170 (6.69)
XGHB44••••	90 (3.54)	190 (7.48)	30 (1.18)	310 (12.20)	400 (15.74)	160 (6.29)

Angular Positioning

The angle between the Smart Antenna and the tag modifies the sensing distance according to the graph below:

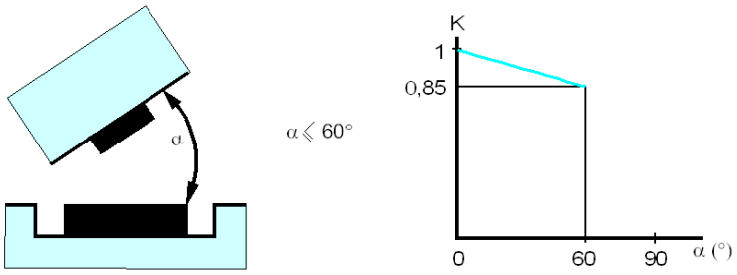

K = correction factor to be applied to the nominal sensing distance.

Sensing distance = nominal sensing distance x K.

Sensing Zones

The dialog zones of the Smart Antennas are circular. There is no recommended direction for the movement of the tag. The following diagram shows the dialog zones of the Smart Antennas:

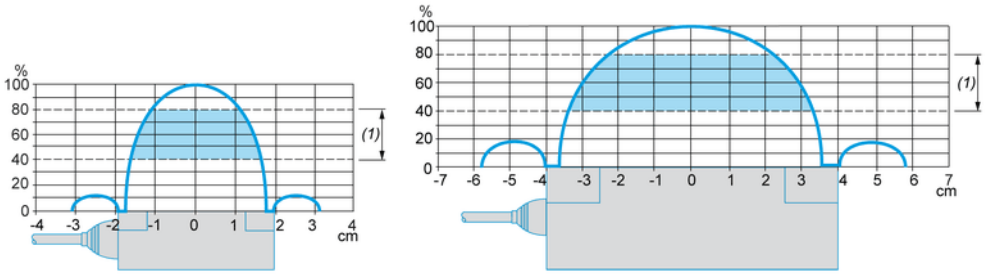

(1) Movement zone consulted: between 0.4 and 0.8 of the nominal sensing distance.

NOTE: Nominal sensing distance (Pn)
The conventional sensing distance does not take the dispersions (manufacturing, temperature, voltage, assembly in the metal) into account.

Assembly in the Metal

The presence of metal near the tags and the Smart Antennas affects the sensing distance (Reading/Writing distance).

The table shows the minimum assemblies allowed in a metal block:

References	Description
XGCS4901201 XGCS8901201 XGCS49•B201 XGHB221346 XGHB44••••	The product is positioned in a steel block: 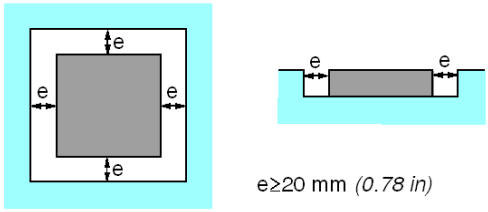
XGHB90E340 XGHB123345 XGHB211345 XGHBPB0345	No metallic piece is less than 25 mm (0.98 in.) from the tag.
XGHB32•••• XGHB52••••	The tag is fixed with an M4 steel screw (tightening torque = 1 Nm (8.85 lbf-in)). It is necessary to insert a non-metallic wedge between the tag and the metal tag: 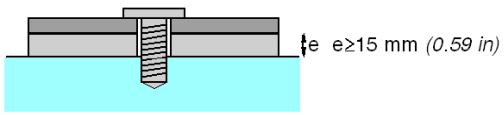

The following table shows the effect on the nominal sensing distance when the Smart Antenna and the tag are assembled in metal according to the most unfavorable cases shown above:

Reference	Memory size (bytes)	Dimensions	Reduced Sensing distance with metal		Nominal Sensing distance	
			XGCS4	XGCS8	XGCS4	XGCS8
XGHB90E340	256	Badge of 85x58x0.8 mm (3.35x2.28x0.03 in.)	58 mm (2.28 in.)	80 mm (3.15 in.)	70 mm (2.75 in.)	100 mm (3.94 in.)
XGHB520246	112	∅ 50x3 mm (1.97x0.12 in.)				
XGHB221346	256	26x26x13 mm (1.02x1.02x0.51 in.)	30 mm (1.18 in.)	33 mm (1.29 in.)	40 mm (1.57 in.)	55 mm (2.16 in.)

Reference	Memory size (bytes)	Dimensions	Reduced Sensing distance with metal		Nominal Sensing distance	
			XGCS4	XGCS8	XGCS4	XGCS8
XGHB320345	112	∅ 30x3 mm (1.18x0.12 in.)	45 mm (1.77 in.)	56 mm (2.20 in.)	48 mm (1.89 in.)	65 mm (2.56 in.)
XGHB320246	2000					
XGHB211345	256	∅ 18x12 mm (0.70x0.47 in.)	16 mm (0.62 in.)	15 mm (0.59 in.)	18 mm (0.70 in.)	20 mm (0.78 in.)
XGHB123345	304	∅ 12x8 mm (0.47x0.31 in.)				
XGHB444345	3408	40x40x15 mm (1.57x1.57x0.59 in.)	28 mm (1.10 in.)	34 mm (1.33 in.)	33 mm (1.30 in.)	48 mm (1.89 in.)
XGHB440245	2000	40x40x15 mm (1.57x1.57x0.59 in.)	30 mm (1.18 in.)	45 mm (1.77 in.)	45 mm (1.77 in.)	65 mm (2.56 in.)
XGHB440845	8192	40x40x15 mm (1.57x1.57x0.59 in.)	20 mm (0.78 in.)	28 mm (1.10 in.)	25 mm (0.98 in.)	39 mm (1.53 in.)
XGHB441645	16384					
XGHB443245	32768					
XGHBPB3345	720	40x31x4.8 mm (1.57x1.22x0.189 in.)	N/A		30 mm (1.18 in.)	45 mm (1.77 in.)

Distances Between Tags

NOTICE
UNINTENDED OPERATION Follow the installation precautions given below on distances between 2 tags. **Failure to follow these instructions can result in equipment damage.**

NOTE: When two tags are too close to one another, this may trigger dialog errors.

This figure illustrates the minimum distance between 2 identical tags:

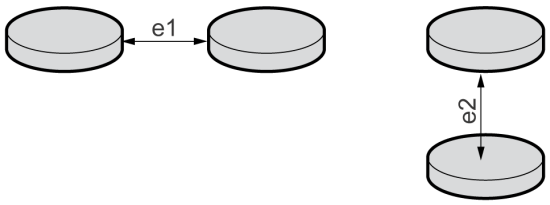

Minimum distances between 2 identical tags according to their positioning:

Tag reference	Minimum Distances in mm (inches)			
	XGCS4		XGCS8	
	e1	e2	e1	e2
XGHB90E34 XGHB90E340 XGHB520246	35 (1.37)	60 (2.36)	110 (4.33)	140 (5.51)
XGHB221346	50 (1.96)	10 (0.39)	120 (4.72)	50 (1.96)
XGHB320345 XGHB440245 XGHB320246 XGHBPB3345	70 (2.75)	50 (1.96)	190 (7.48)	60 (2.36)
XGHB211345 XGHB123345	40 (1.57)	10 (0.39)	120 (4.72)	20 (0.78)
XGHB444345	20 (0.78)	10 (0.39)	70 (2.75)	40 (1.57)
XGHB440845 XGHB441645 XGHB443245	10 (0.39)	10 (0.39)	60 (2.36)	10 (0.39)

Electromagnetic Disturbances

NOTICE
UNINTENDED OPERATION Do not install the Smart Antennas less than 300 mm (12 in) from a device generating electromagnetic disturbances (electric motor, solenoid valve…). **Failure to follow these instructions can result in equipment damage.**

NOTE: Electromagnetic disturbances may block the dialog between the Smart Antenna and a tag.

Connecting the Smart Antennas

Connector Wiring

The Smart Antennas are equipped with a single male M12 A-coded connector for the power supply and communication bus.

The communication bus wires are shielded separately from the power supply cables to avoid disturbances carried by the power supply causing interference on the communication wires.

Smart Antenna M12 connector pinout:

M12 Connector	Pin no.	Signal	Description
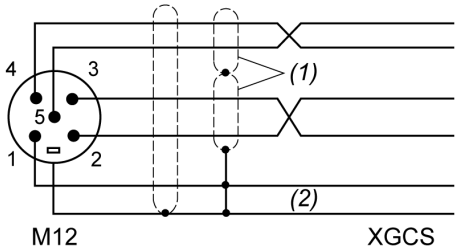 **(1)** Shielding by pair **(2)** General cable shielding	1	(SHLD) drain	Cable shielding
	2	24 Vdc	Smart Antenna Power supply *
	3	0 V/GND	0 V
	4	D0	RS485
	5	D1	RS485
	Connector casing	Shielding	Cable shielding

NOTE: *: Use a PELV power supply and fuse protection (1 A). The power supply used must be class II according to VDE 0106 (for example: Phaseo ABL 7/8 range of Schneider Electric). The 0 V must be connected to the ground to increase EMC strength .

Range of Accessories

The splitter boxes and Modbus TCS cables supply power to the Smart Antennas and enable their quick, easy connection to the Modbus network.

Accessory	Description	Reference
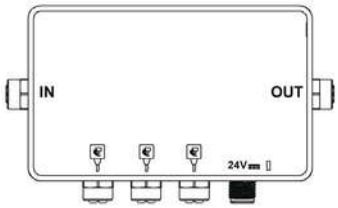	Splitter boxes for connecting up to 3 Smart Antennas: ● Modbus ● Modbus Ethernet TCP/IP * ● PROFIBUS-DP * ● EtherNet/IP * *: Refer to related User Guides *(see page 8)*.	TCSAMT31FP XGSZ33ETH XGSZ33PDP XGSZ33EIP
	Shielded cable, 5-way male/female A-coding M12, for Modbus RS485 connection between one TCSAMT31FP splitter box and a Smart Antenna (or to another splitter box)	TCSMCN1M1F1 (1 m/3.28 ft) TCSMCN1M1F2 (2 m/6.56 ft) TCSMCN1M1F5 (5 m/16.4 ft) TCSMCN1M1F10 (10 m/32.8 ft)
	Shielded cable, 5-way female A-coding M12/flying leads, for Modbus RS485 connection between one TCSAMT31FP splitter box and a TSXSCA50 box.	TCSMCN1F2 (2 m/6.56 ft) TCSMCN1F5 (5 m/16.4 ft) TCSMCN1M1F10 (10 m/32.8 ft)
	Cable, 4-way female A-coding M12/flying leads, for the splitter box power supply	XGSZ09L2 (2 m/6.56 ft) XGSZ09L5 (5 m/16.4 ft) XGSZ09L10 (10 m/32.8 ft)

Accessory	Description	Reference
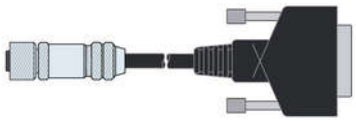	Shielded cable, 5-way female A-coding M12 / 5-way SUB-D, for connecting the TCSAMT31FP splitter boxes to a TSXSCA62 box.	TCSMCN1FQM2 (2 m/6.56 ft)
	Shielded 5-way female A-coding M12 connectors.	XZCC12MDB50R (female) XZCC12FDB50R (male)
	Tee, 5-way female M12/5-way female M12 + 5-way A-coding male M12.	TCSCTN011M11F
	120 Ω line terminator, male A-coding M12. **For Modbus and CANopen only, not to be used in Uni-Telway.**	TM7ACTLA

Wiring a Modbus Network

Network Architecture

Example of a Modbus network assembly:

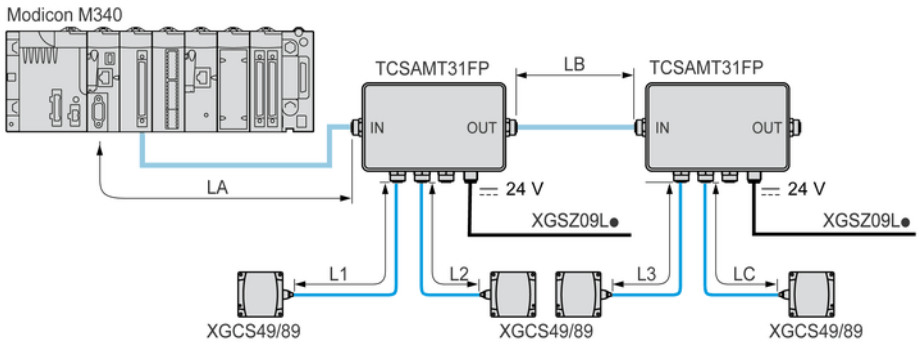

Cable Sizes

The cables used for this assembly must comply with the rules for the maximum lengths of buses and tap-offs.

Maximum Bus Length

Using the OsiSense XG Smart Antennas, the maximum length of the (LA + LB + LC) bus depends on the protocol speed:

Modbus speed	The maximum length of the bus with the OsiSense XG Smart Antennas
9600 Bauds	1000 m (3280 ft)
19200 Bauds	500 m (1640 ft)

NOTE: In Modbus, for a length greater than 100 m (328.08 ft), it is recommended to add a line terminator to the network ends (at the end of the LC segment in this example).

Maximum Tap-Off Length

The maximum length of the (L1, L2 and L3) tap-offs is 10 m (32.8 ft).

Connecting to a PLC Schneider Electric in Modbus

Direct connection:

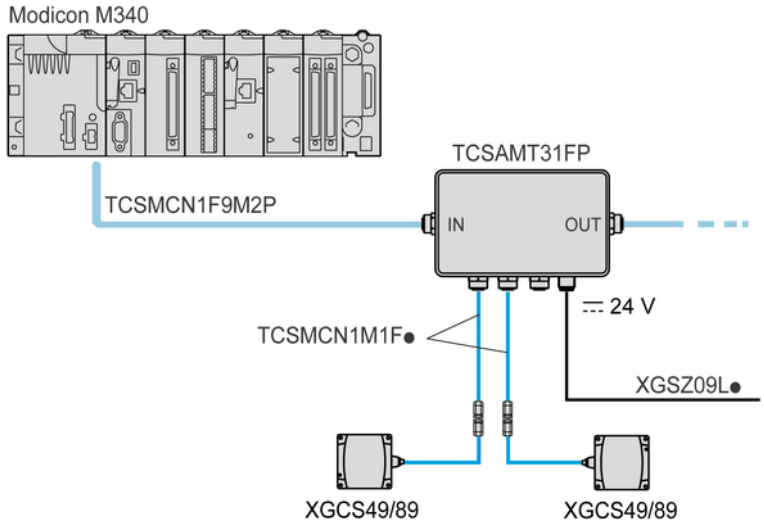

Connection via a TSX SCA62:

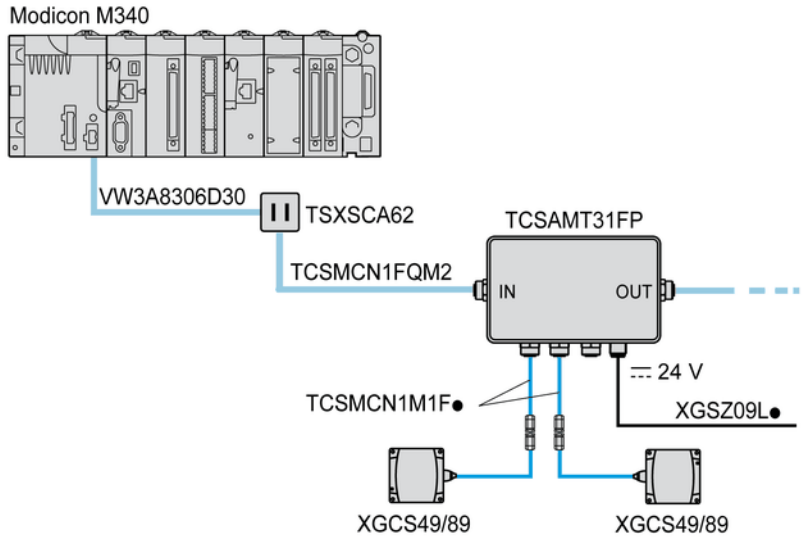

Connection of Line Terminators in Modbus

The use of long network cables may produce signal deformations. The installation of a line terminator will correct these deformations.

Depending on the cable quality and the EMC environment, a line terminator near the Smart Antenna (M12 tee) may be necessary.

Examples:

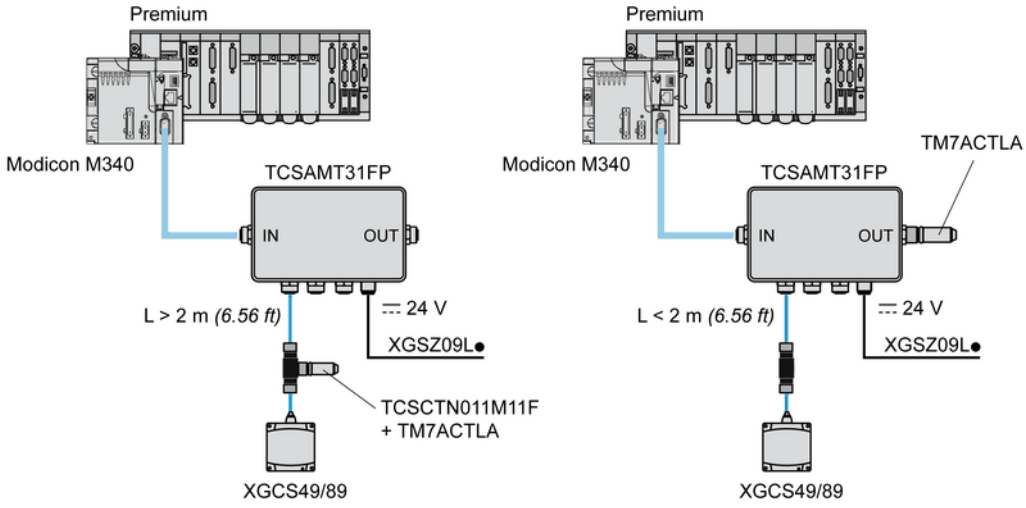

The line terminator may be in a different position, depending on the distance between the Smart Antenna and the splitter box.

Wiring an Ethernet Modbus TCP/IP Network

Connection Diagram

Example of a Modbus Ethernet TCP/IP network setup with splitter box XGSZ33ETH:

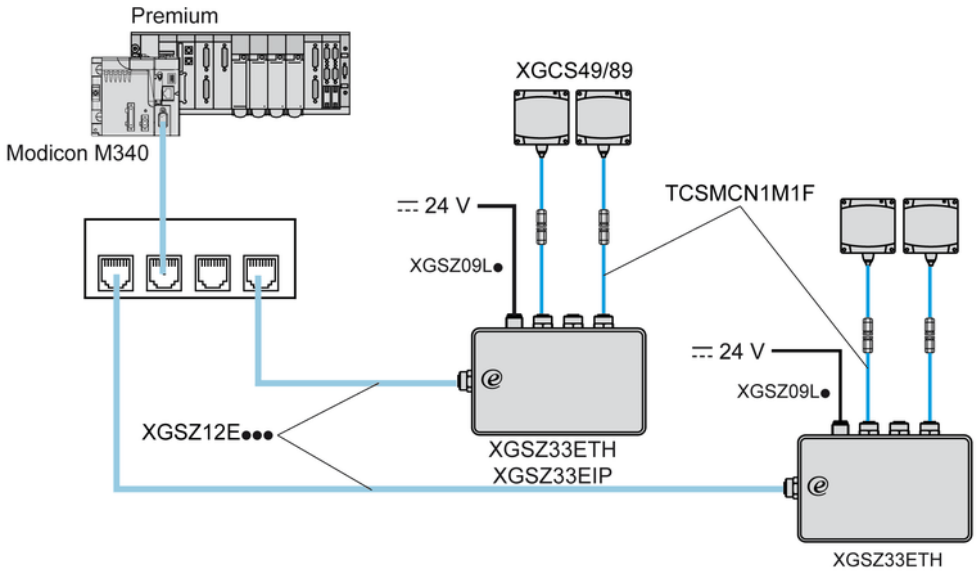

The default transmission speed of the Ethernet splitter box (XGSZ33ETH) is 57600 bauds. This speed allows a total bus length of 160 m (524.93 ft) between the splitter box and the Smart Antennas.

Example:

- 3 x 50 meters (3 x 164.04 ft) for 3 Smart Antennas,
- 2 x 80 meters (2 x 262.46 ft) for 2 Smart Antennas.

The splitter box contains a line terminator.

Using long network cables can generate signal distortion. The installation of line terminators corrects these distortions.

An additional line terminator near one of the Smart Antennas (M12 tee) may be necessary, depending on the quality of the cables and the EMC environment.

Connecting a TCSAMT31FP Splitter Box

Description

Description of a splitter box:

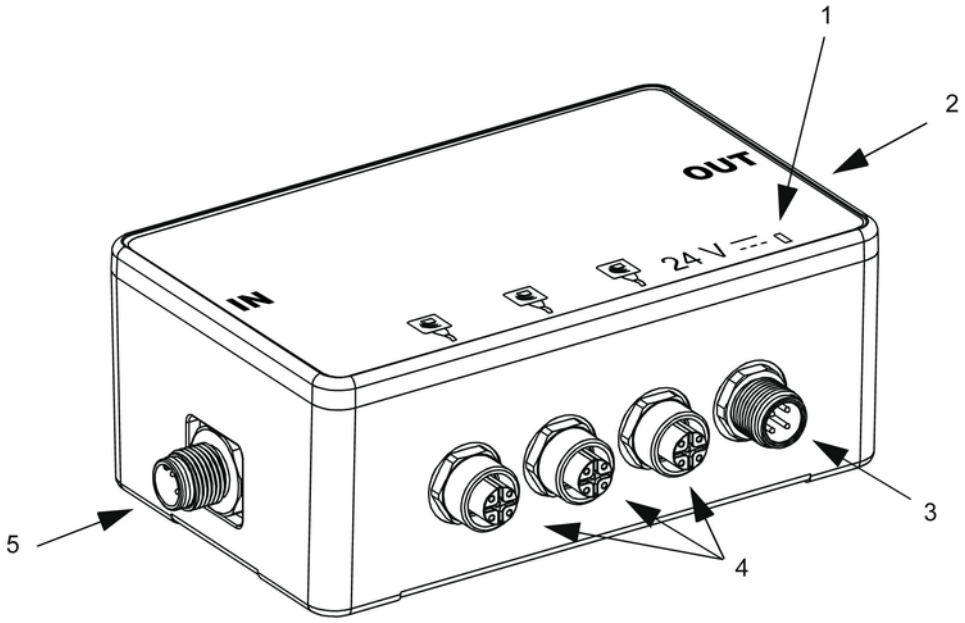

No.	Description
1	Green LED indicating the voltage present
2	Sub-base to another splitter box (**OUT** network)
3	24 Vdc power supply sub-base
4	3 OsiSense XG Smart Antennas sub-bases
5	Sub-base to a PLC or another splitter box (**IN** network)

Dimensions

Dimensions in mm *(inches)*:

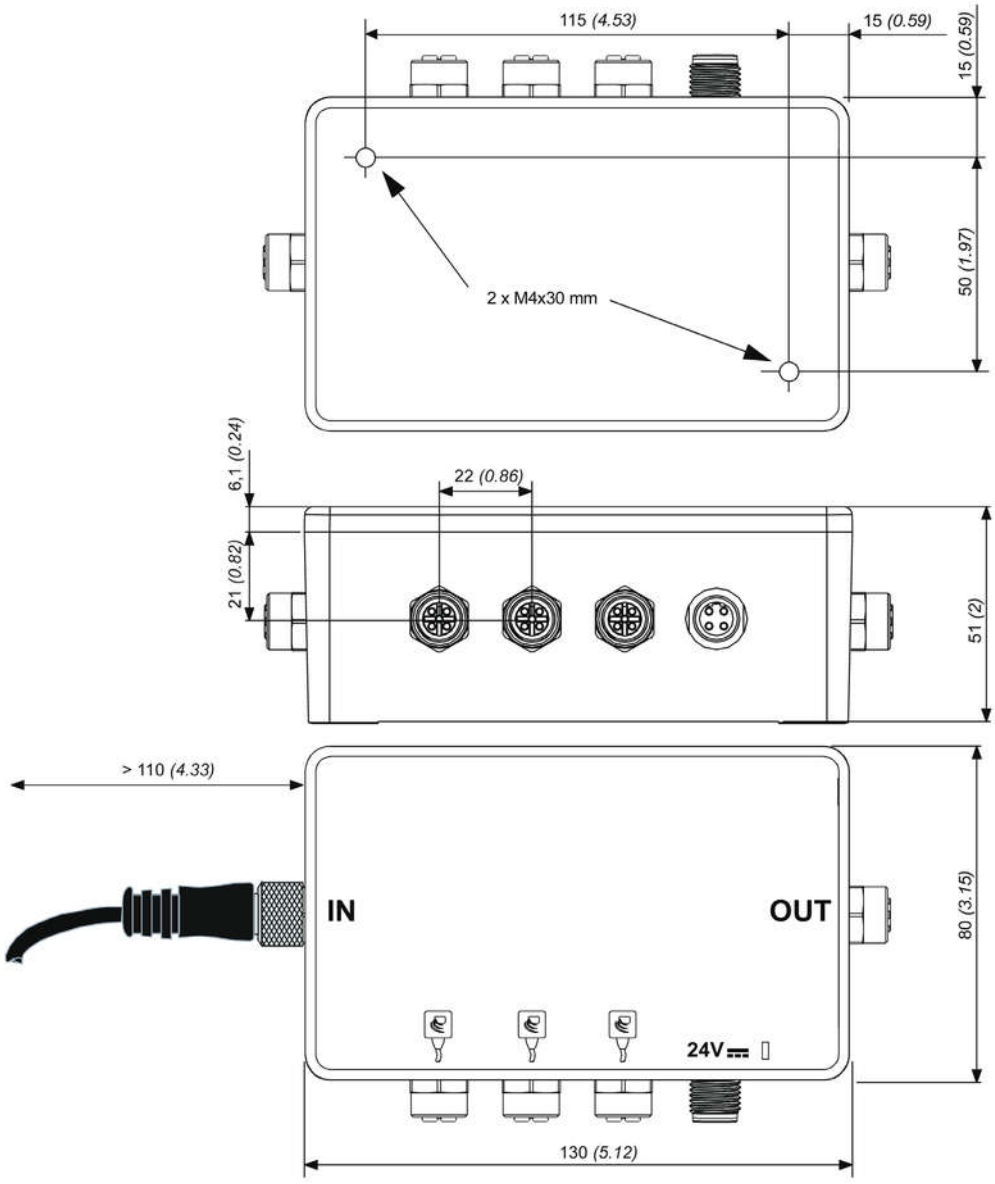

Sub-Base to Smart Antenna Wiring

Pinout of the female M12 A-coding sub-base (Smart Antenna link):

Diagram	Pin no.	Signal	Description
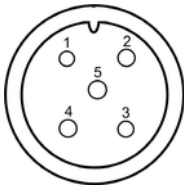	1	(SHLD) drain	Cable shielding
	2	24 Vdc	Smart Antenna power supply
	3	0 V/GND	0 V
	4	D0	RS485
	5	D1	RS485
	Connector casing	Shielding	Cable shielding

Sub-Base to Power Supply Wiring

Pinout of the A-coding male M12 sub-base (Power supply):

Diagram	Pin no.	Signal	Description
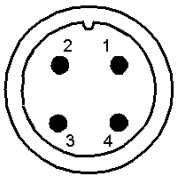	1	24 Vdc	Power supply +
	2	24 Vdc	Power supply +
	3	0 V	Power supply -
	4	0 V	Power supply -

Wiring for Sub-Base to Another Splitter Box

Pinout of the female M12 A-coding sub-base (OUT network):

Diagram	Pin no.	Signal	Description
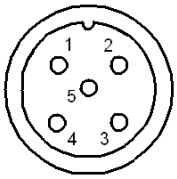	1	(SHLD) drain	Cable shielding
	2	-	Reserved
	3	0 V/GND	0 V
	4	D0	RS485
	5	D1	RS485
	Connector casing	Shielding	Cable shielding

Sub-base to PLC Wiring

Pinout of the A-coding male M12 sub-base (IN network):

Diagram	Pin no.	Signal	Description
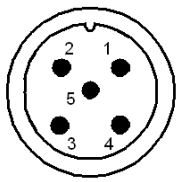	1	(SHLD) drain	Cable shielding
	2	-	Reserved
	3	0 V/GND	0 V
	4	D0	RS485
	5	D1	RS485
	Connector casing	Shielding	Cable shielding

Wiring

Connecting the TCSMCN1F• cables:



Connection:

Diagram	Pin no.	Signal	Description	Wire color
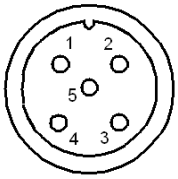	1	(SHLD) drain	Cable shielding	-
	2	24 Vdc	Smart Antenna power supply	Red
	3	0 V/GND	0 V	Black
	4	D0	RS485	White
	5	D1	RS485	Blue
	Connector casing	Shielding	Cable shielding	-

Chapter 3
Setting the System Parameters

Aim of This Chapter

This chapter describes the Smart Antenna parameter settings for network communication with the control system.

What Is in This Chapter?

This chapter contains the following topics:

Topic	Page
Setting the Smart Antenna Parameters	34
Setting the PLC Parameters	37

Setting the Smart Antenna Parameters

General

Each time the Smart Antenna is powered up, it automatically detects the format and network speed.

The Smart Antennas are supplied configured at network address 1 with a transmission speed of 19200 Bauds.

Before use, it is essential to configure the network address of each Smart Antenna. Smart Antennas can be addressed in two ways:

- Either using the XGSZCNF01 configuration badge (supplied with the Smart Antenna)
- Or via the network (Modbus write command).

Smart Antenna Initialization

The Smart Antenna start-up cycle is as follows:

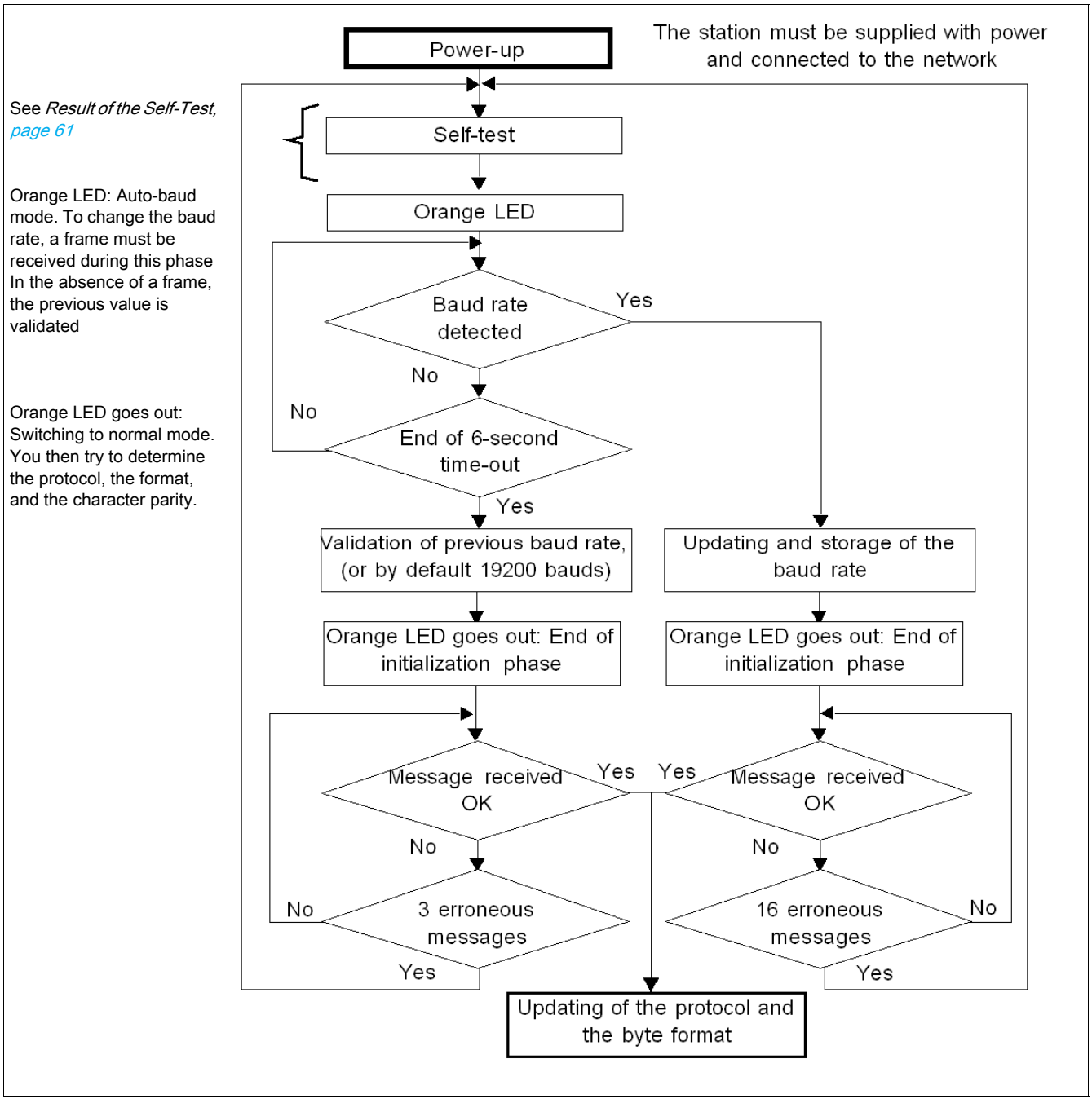

Tip: Initiate a Smart Antenna status word read loop to allow auto-configuration of the Smart Antenna. As soon as the Smart Antenna begins to respond, it is ready to operate.

The address configuration cycle is as follows:

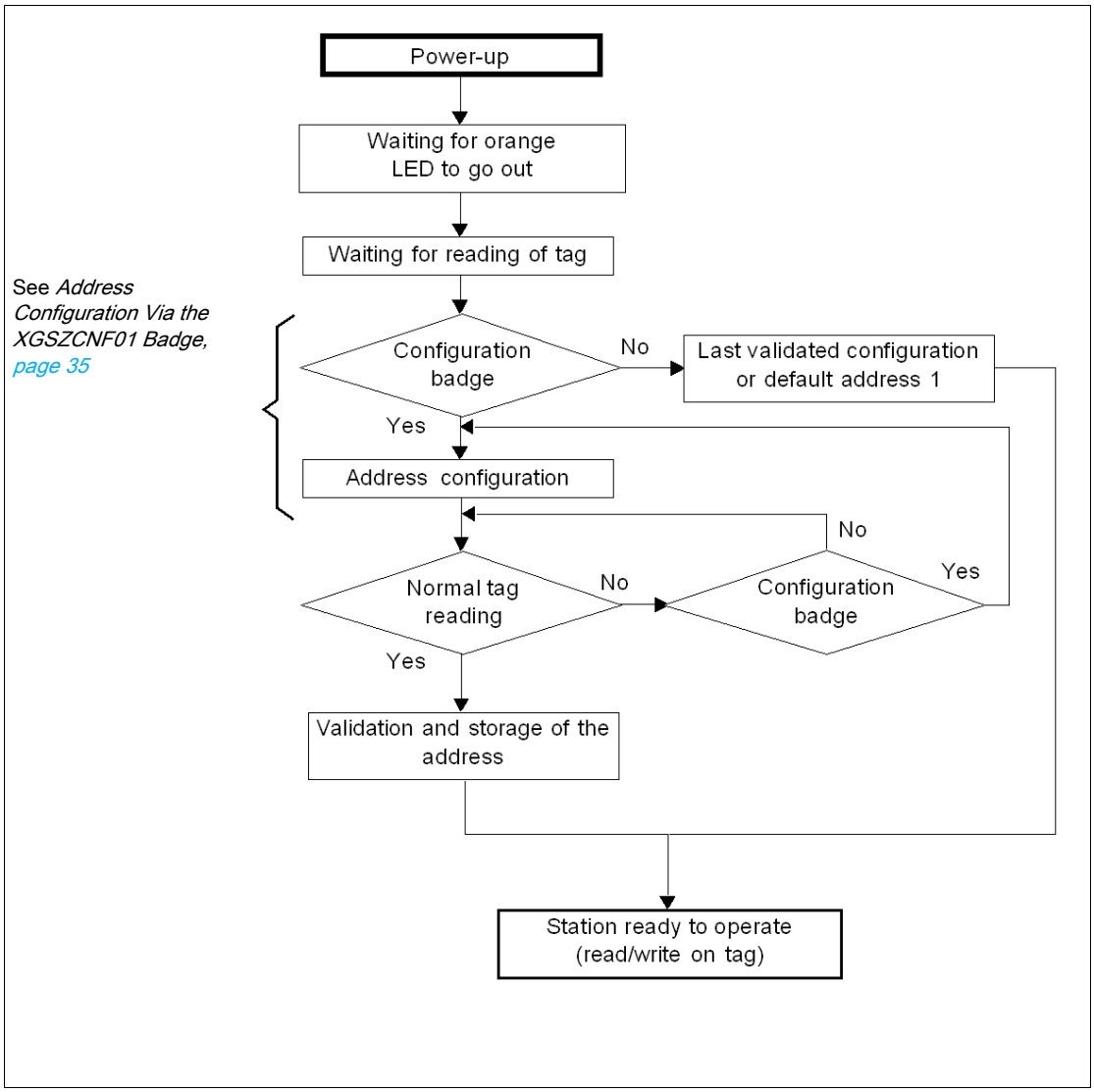

See *Address Configuration Via the XGSZCNF01 Badge, page 35*

Address Configuration Via the XGSZCNF01 Badge

The addressing procedure is described on the back of the configuration badge:

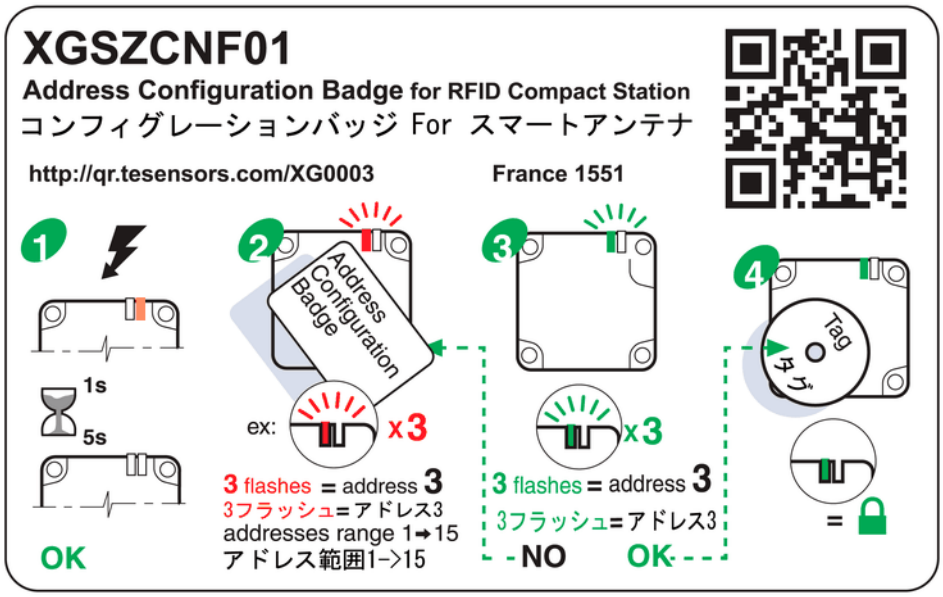

Configuring the Smart Antenna network address:

Step	Action	Result
1	Power-up the Smart Antenna Wait for 5 seconds	Smart Antenna self-test
2	Place the configuration badge in front of the Smart Antenna. Count the number of flashes.	The TAG LED flashes red. Each red flash emitted corresponds to one increment of the network address.
3	Remove the configuration badge when the required network address is reached.	The TAG LED flashes green. The number of green flashes emitted corresponds to the network address that has just been configured. It is then possible to restart the configuration at step 2.
4	Place a "normal" (XGHB) tag in front of the Smart Antenna.	The configured network address is confirmed and saved in the Smart Antenna.

NOTE: The network address ranges from 1 to 15.

Addressing Via the Network

The Smart Antenna address can be modified using a standard word write request (see *Smart Antenna System Memory Zone, page 41*).

The request is sent to the known Smart Antenna address. The new address is immediately effective.

When the execution report has been sent, the TAG LED will emit as an echo a number of green flashes equivalent to the address that has just been configured.

NOTE: The network address range is from 1 to 15.

Setting the PLC Parameters

Electrical Characteristics

The network interface module supports 2-wire RS485.

Communication Configuration for Modbus

The Modbus communication parameters that define the frame can be configured in various ways.

The OsiSense XG Smart Antenna parameters are defined so that they support the following values:

Parameter	Modbus Value
Mode	RTU
Parity	Automatic detection (even, odd, none)
Stop bit	1
Data bit	8
Data rate	Automatic detection (9,600…115,200 bauds)

⚠ WARNING

UNINTENDED OPERATION

Ensure that there is communication between all devices present in the network by using the appropriate parameters. Disparity between the parameters is likely to lead to unintended operation of the entries, output as well as other devices. The hardware configuration may cause unintended equipment operation.

Failure to follow these instructions can result in death, serious injury, or equipment damage.

Chapter 4
Operating Principles

Aim of This Chapter

This chapter describes the system operating principle based on memory zones.

What Is in This Chapter?

This chapter contains the following topics:

Topic	Page
Memory Zones	40
Smart Antenna System Memory Zone	41
Smart Antenna Command/Instructions Memory Zone	43
Tag Memory Zone	50

Memory Zones

Presentation

The addressing memory zone is divided into two zones:

- The tag memory zone
- The Smart Antenna memory zone:
  - System zone *(see page 41)*,
  - Command/instructions zone *(see page 43)*.

Definition of the address zones of holding registers used:

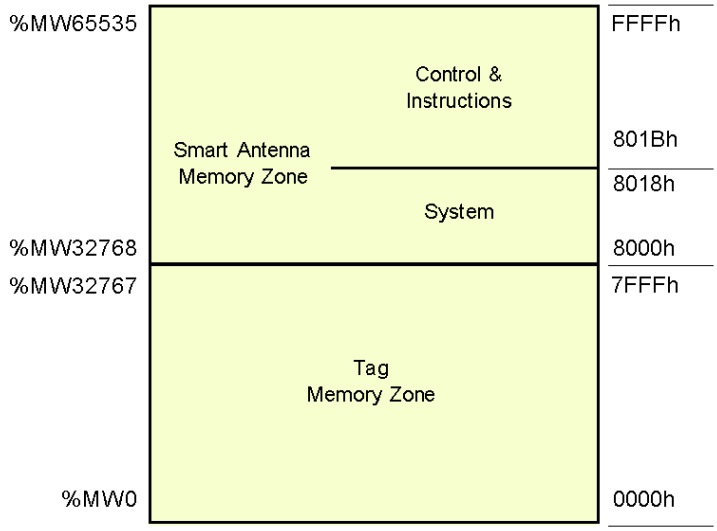

Smart Antenna System Memory Zone

Description of the Zone

Composition of the system zone:

Register	Description	Access [1]	Protected
8000 h	Tag family present / Tag system flags	R	No
8001 h	Tag counter	R/W	No
8002…8009h	UID	R	No
8018 h	Smart Antenna address	R/W	Yes

[1] R = Read, W = Write

Modifications to values in this zone are taken into account by the Smart Antenna immediately.

Register 8000 h

Status:

MSB byte		LSB byte	
Tag family present Indicates the tag family while it is present. Reset when no longer present.		**Tag system flag** Real-time updating.	
Bit		Bit	
8	15693	0 (LSB)	Tag present
9	Icode	1	Initial parameter-setting phase following boot-up
A	14443A	2	Reserved
B	14443B	3	Reserved
C	Inside	4	Reserved
D	Reserved	5	Present configuration badge
E	Reserved	6	Reserved
F (MSB)	Reserved	7	Reserved

Register 8001 h

Tag counter:

MSB byte	LSB byte
Incremented each time there is a new tag. RAZ at each power switch-on. Possible written access to predefine a value in the counter.	

Registers 8002 h…8009h

UID:

MSB byte	LSB byte
Updated each time there is a new tag and valid if tag present.	

Each tag has a different single code (UID). This code is distributed in 16 bytes.

Register 8018 h

Smart Antenna address:

Reading request:

Response to the reading request:

MSB byte	LSB byte
0	Smart Antenna address

Writing request:

Writing request		Result
MSB byte	LSB byte	
0...1E	Smart Antenna address	No action
1F	Smart Antenna address	The new Smart Antenna address is effective immediately.

Smart Antenna Command/Instructions Memory Zone

General Description

The zone can activate the commands or operating modes and consists of:

Register	Table	Description	Access *	Protected
801Bh	Command	Activates operations such as initialization, automatic reading or writing, sleep mode, etc.	R/W	No
801C…80AFh	Reserved	Reserved	-	-
80B0…80EF	Instruction block	Sets parameters by up to 7 instructions, which are executed sequentially.	R/W	No
80F0…810Fh	Reserved	Reserved	-	-
8110…817Fh	Reading table	Stores the results of the tag-reading operations and monitors the execution of the instructions.	R	No
8190…81E6h	Writing table	Stores the data which are to be written in the tags.	R/W	No
81E7h	Multicolor LEDs command	Commands the 2 multicolor LEDs of the XGCS49LB201.	R/W	No
81E8…FFFFh	Reserved	Reserved	-	-

*: R = Read, W = Write

801Bh Register: Command

This register executes the following commands:

- **Reset:**
  - Reinitialization of the default factory adjustments
  - Launching the initialization sequence
  - The network address is set to 1
  - The network speed is adjusted to 19200 Bauds
  - The Command/instructions memory zone is reset to zero
  - The sleep mode is deactivated
  - The network address can be modified using the configuration badge *(see page 35)* whereas the Smart Antenna does not see a "normal" tag
- **Init:**
  - Smart Antenna reinitialization
  - Launching the initialization sequence
  - The network address is unchanged
  - The network speed is unchanged
  - The Command/instructions memory zone is reset to zero
  - The sleep mode is deactivated
  - The network address can be modified using the configuration badge *(see page 35)* whereas the Smart Antenna does not see a "normal" tag
- **Sleep Mode:**
  - activation/deactivation of the Sleep Mode,
  - Emission of the electromagnetic field of the Smart Antenna is activated only when receiving a reading or writing request. This mode reduces the Smart Antenna consumption and frees it from interferences when the Smart Antennas are close to another one.
- **Execution of the instructions block:**
  - Defines the occurrence of executing the instructions block in the Smart Antenna
  - Unit execution command: the instruction block is executed once after detecting the first tag
  - Automatic execution command: the instruction block is executed at each tag detection up to the next reset or when the Smart Antenna is switched off

NOTE: To be able to use the execution commands of the instructions block, the "Sleep" mode must be deactivated. Since this mode cannot detect the presence of a tag in the dialog zone.

Command	Activation	Deactivating the command	Comment
Reset	4040 h	-	After executing the command, the 801Bh register automatically retrieves its default value.
Init	2020 h	-	
Sleep Mode	1010 h	1000 h	After restarting the Smart Antenna, the Sleep Mode is deactivated.
Execution of the instructions block	0101 h	0100 h	Single execution when a tag is present in front of the Smart Antenna.
	0202 h	0200 h	Execution performed each time a new tag is present in front of the Smart Antenna.

NOTE: After restarting the Smart Antenna, the 801Bh register automatically retrieves its default value.

80B0...80EFh Registers: Instruction Block

The instructions block predefines up to 7 instructions. The instructions are executed (in the ascending order) when a tag is detected by the Smart Antenna.

Each instruction consists of 8 16-bit registers which define the parameters associated with it. The number of registers used to set the parameters of different instructions varies. The registers that are not used must be defined at 0000 h.

The first register of each instruction is divided into two parts:
- The MSB byte defines the type of instruction to be executed.
- The LSB byte defines the number of registers processed by the instruction.

Data entry or instructions output is contained in the two tables:
- A writing table containing the data to be written in a writing instruction
- A reading table containing:
  - Diagnostic information associated with the execution of the instructions block
  - Data read in a reading instruction

Reading Instruction (C1)

Instruction structure:

Register		Instruction field	Type	Value	Comment
1st	MSB	Instruction code	Byte	C1h	C1: **C**opy **I**n
	LSB	Number of registers	Byte	01…40h	Number of registers to be read
2nd		Address	Word	0000…FFFFh	Address of the first register to be read from the Smart Antenna or tag
Reserved			Word	0000 h	-
Reserved			Word	0000 h	-
Unused			Word	0000 h	System registers to be defined at 0
			Word	0000 h	
			Word	0000 h	
			Word	0000 h	

Writing Instruction (C0)

Instruction structure:

Register		Instruction field	Type	Value	Comment
1st	MSB	Instruction code	Byte	C0h	C0: **C**opy **O**ut
	LSB	Number of registers	Byte	01…40h	Number of registers to be written
2nd		Address	Word	0000…FFFFh	Destination address of the first register to be written from the Smart Antenna or tag
Reserved			Word	0000 h	-
Reserved			Word	0000 h	-

Register	Instruction field	Type	Value	Comment
Unused		Word	0000 h	System registers to be defined at 0
		Word	0000 h	
		Word	0000 h	
		Word	0000 h	

Copying Instruction (CD)

Instruction structure:

Register		Instruction field	Type	Value	Comment
1st	MSB	Instruction code	Byte	CDh	C0: **C**opy **D**ata
	LSB	Number of registers	Byte	01…FFh	Number of registers to be written
2nd		Data	Word	0000…FFFFh	Value to be copied
3rd		Address	Word	0000…7FFFh	First memory zone address to be written
4th		Iteration	Word	0001…1FFFh	Number of iterations to be executed
Unused			Word	0000 h	System registers to be defined at 0
			Word	0000 h	
			Word	0000 h	
			Word	0000 h	

8110...817Fh Registers: Reading Table

The reading table stores the consecutive result in a reading instruction (C1) as well as review the execution review of the instructions block (2 registers). Reading this review monitors progress of the instructions sequence.

Structure of the reading table:

Register	Description		
	MSB		LSB
	PF quartet	Pf quartet	
8110 h	Smart Antenna status: image of the Register 8000 h *(see page 41)*		
8111 h	Instruction no.	Detected error code	Tag counter: image of the Register 8001 h *(see page 41)*
8112 h	Data read as 1, 1st reading instruction		
8113 h	Data read as 2, 1st reading instruction		
...	...		
...	Data read as N, 1st reading instruction		
...	Data read as 1, 2nd reading instruction		
...	Data read as 2, 2nd reading instruction		
...	...		
...	Data read as N, 2nd reading instruction		
...	Data read as 1, nth reading instruction		
...	Data read as 2, nth reading instruction		
...	...		
...	Data read as N, nth reading instruction		
...	...		
817Fh	...		

NOTE: All reading instructions must not exceed the table capacity of 110 registers.

Description of the 8111 h register:

Bit	Signification	Description
15...12	Instruction no.	Number of the last instruction executed without detected error, such as "Detected error in the 3rd block instruction, therefore, the instruction no. = 2 h"
11...8	Detected error codes	Modbus detected error codes: ● 1 h: unknown function code or incorrect request format ● 2 h: incorrect address, prohibited or protected zone or address not lying in the tag memory zone ● 3 h: incorrect data. Too much data in the frame or insufficient or quantity = 0 or incompatible data ● 4 h: execution fault (in reading, writing, or tag missing)
7...0	Tag counter	Image of the Register 8001 h *(see page 41)*

NOTE:
For example, if the 8111 h register has the value 2409 h, it means:
- 2 h: Detected error in the 3rd block instruction.
- 4 h: execution fault detected (in reading, writing, or tag missing)
- 09 h: 09 tags have been detected (since the last RAZ of the counter).

Monitoring the Execution of the Instructions Block

Reading the 8111 h system register of the Smart Antenna controls the execution of the instructions block:

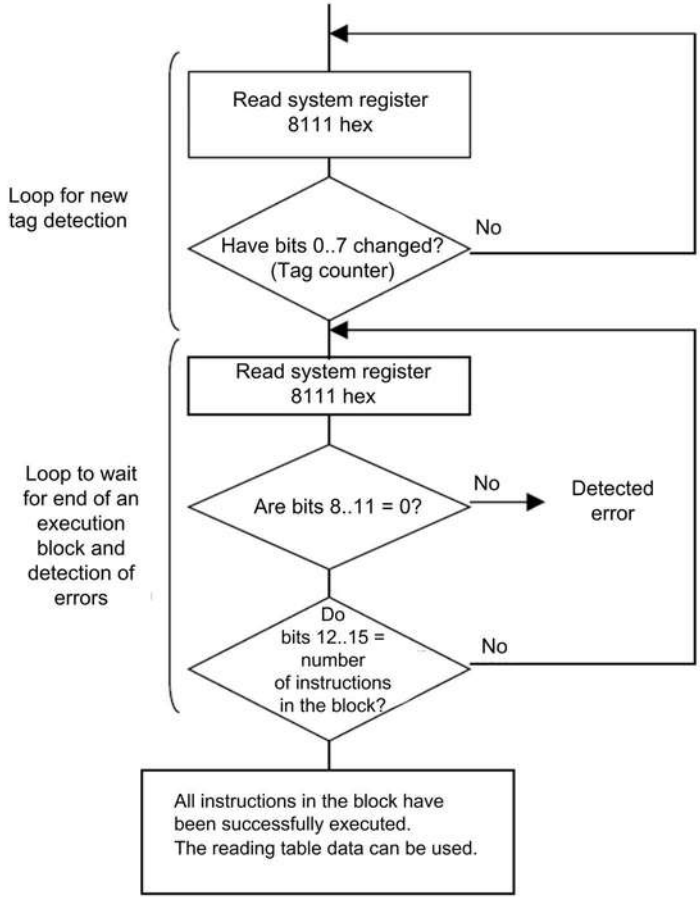

8190…81E6h Registers: Writing Table

The writing table stores the data to be written in a writing instruction.

Structure of the writing table:

Register	Description
8190 h	Data to be written as 1, 1st written instruction
8191 h	Data to be written as 2, 1st written instruction
...	...
...	Data to be written as N, 1st written instruction
...	Data to be written as 1, 2nd written instruction
...	Data to be written as 2, 2nd written instruction
...	...
...	Data to be written as N, 2nd written instruction
...	...
...	Data to be written as 1, nth written instruction
...	Data to be written as 2, nth written instruction
...	...
...	Data to be written as N, nth written instruction
...	...
81E6h	...

Application Example

In the following example, you define an instruction block containing 3 instructions:

- A reading instruction of 3 registers at the 0001 h address
- A writing instruction of 2 registers at the 0010 h address
- A reading instruction of 4 registers at the 0020 h address

Definition of the instructions block:

Address	Value		Instruction no.
	MSB	LSB	
80B0h	C1h	03 h	1
80B1h	0001 h		
80B2...80B7h	0000 h		
80B8h	C0h	02 h	2
80B9h	0010 h		
80BA...80BFh	0000 h		
80C0h	C1h	04 h	3
80C1h	0020 h		
80C2...80C7h	0000 h		

Definition of the writing table (data to be written in a writing instruction):

Address	Value	Instruction associated
8190 h	For example: FEFEh	2
8191 h	For example: 0A0Bh	

Setting the parameters to activate the commands for each tag movement:

Address	Value	Instruction associated
801Bh	0202 h	Executing the instruction block at each new tag

Data received in the reading table after executing the instructions block:

Address	Value		Instruction associated
	MSB	LSB	
8110 h	Smart Antenna status		-
8111 h	30 h	01 h	Composition: ● 30 h (MSB) = three instructions executed without detected error ● 01 h (LSB) = 1st tag detected by the Smart Antenna
8112 h	0001 h register content		Result of instruction number 1 (reading 3 registers)
8113 h	0002 h register content		
8114 h	0003 h register content		
8115 h	0020 h register content		Result of instruction number 3 (reading 4 registers)
8116 h	0021 h register content		
8117 h	0022 h register content		
8118 h	0023 h register content		

Example of data received in the reading table after executing the instructions block containing detected errors:

Address	Value		Instruction associated
	MSB	LSB	
8110 h	Smart Antenna status		-
8111 h	14 h	01 h	Composition: ● 14 h (MSB) = execution of the instructions block was stopped due to a dialog detected error with the tag in instruction number 2 (instruction number 1 was executed correctly and instruction number 3 was not executed) ● 01 h (LSB) = 1st tag detected by the Smart Antenna
8112 h	0001 h register content		Result of instruction number 1 (reading 3 registers)
8113 h	0002 h register content		
8114 h	0003 h register content		

Definition of an instruction block that can delete the first 50 registers in each tag which is to be shown in front of the Smart Antenna:

Address	Value	Instruction associated
80B0h	CD0Ah	CD: Copy Data / 0Ah = 10 registers deleted per iteration
80B1h	0000 h	Filling with the 0000 h value
Address	0000 h	First memory zone address to be written = 0000 h
Iteration	0005 h	Number of iterations to be executed = 5

81E7h Register: Multicolor LEDs

The 81E7h register commands the 2 multicolor LEDs of the XGCS49LB201.

Description of the 81E7h register:

Bit	Signification	Description
15...8	Blinking period	Define the blinking period (Unit 12 ms). The period can be adjusted from 12 ms (period=1) to 3.06 ms (period=255).
7...4	Reserved	-
3	Blinking	Commands the LED blinking
2	Red LEDs	Commands the Red LEDs
1	Green LEDs	Commands the Green LEDs
0	Blue LEDs	Commands the Blue LEDs

7 possible colors for the multicolors LED command with the 81E7h register:

Color	Bit 2	Bit 1	Bit 0
Red	1	0	0
Green	0	1	0
Yellow	1	1	0
Light blue	0	1	1
Purple	1	0	1
Blue	0	0	1
White	1	1	1

Tag Memory Zone

Automated Production Tag

These tags are addressed according to the following table and are accessible in read/write mode.

The Smart Antenna can read any tag in the XGHB range (automatic detection of the tag type).

Tag reference	Memory Size (bytes)	Range Addresses	
		Dec	Hex
XGHB320345	112	0...55	0...37
XGHB520246	112	0...55	0...37
XGHB90E340	256	0...127	0...7F
XGHB211345	256	0...127	0...7F
XGHB221346	256	0...127	0...7F
XGHB123345	304	0...151	0...97
XGHBPB3345	720	0...359	0...167
XGHB440245	2000	0...999	0...3E7
XGHB320246	2000	0...999	0...3E7
XGHB444345	3408	0...1703	0...6A7
XGHB440845	8192	0...4095	0...FFF
XGHB441645	16384	0...8191	0...1FFF
XGHB443245	32768	0...16383	0...3FFF

NOTE: If an address requested is out of the range address of the tag, a detected error code is generated.

Read/Write Time

The table shows the calculation of read/write time in static, and the tags maximum speed in dynamic:

Tag reference	Static		Dynamic					
	Access Time Calculation (ms)		Tag Maximum Speed (m/s)					
	Read Time	Write Time	XGCS4			XGCS8		
			Read a UID	Read a Register*	Read or Write 10 Register*	Read a UID	Read a Register*	Read or Write 10 Register*
XGHB320345	12 + 0.825 x N	12 + 5.6 x N	3.1	1.4	1.2	5.8	2.7	0.9
XGHB520246		12 + 5.6 x N	5.3	1.6	0.6	7.1	4.0	0.8
XGHB90E340		20 + 11.8 x N						
XGHB211345		19 + 4.1 x N	1.8	0.6	0.2	3.2	1.1	0.6
XGHB221346		20 + 11.8 x N	2.8	0.8	0.3	4.2	2.6	0.5
XGHB123345		20 + 11.8 x N	1.8	0.6	0.2	3	0.9	0.4
XGHB440245	7 + 2 x N	7 + 2.4 x N	2.1	1.5	0.6	3.5	2.5	1
XGHB320246								
XGHB444345	9.25 + 0.375 x N	13 + 0.8 x N	3.1	1.4	1.2	4.8	2.7	1.8
XGHB440845 XGHB441645 XGHB443245	6 + 0.25 x N	6 + 0.25 x N	2.3	1.8	1.7	3.8	3.0	2.6
XGHBPB3345	N/A							
N: Number of 16-bit registers *: with use of the “Auto read/write” function								

Chapter 5
Communicating with the Modbus Protocol

Aim of This Chapter

This chapter describes the Modbus protocol communication principle.

What Is in This Chapter?

This chapter contains the following topics:

Topic	Page
General	52
Requests	54
Programming	58

General

Presentation

With reference to the 7-layer OSI model, in which each layer performs a specific service, the Modbus protocol supports the following three layers:

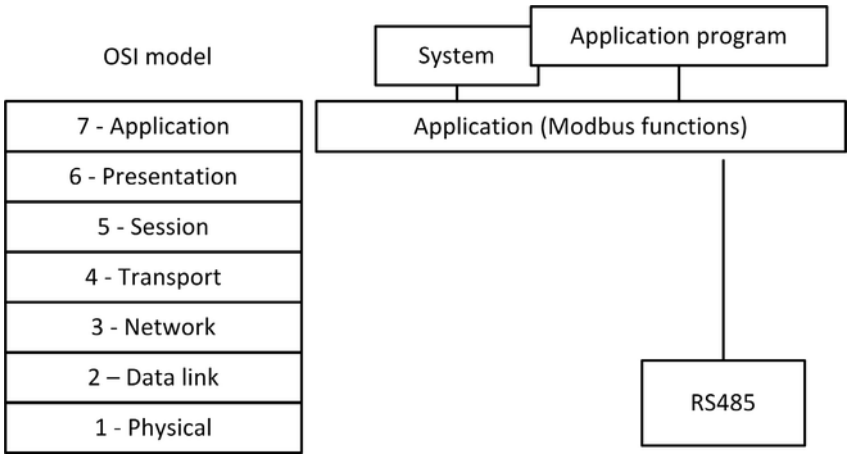

Communication between a PLC (or computer) processor and the OsiSense XG identification system using the Modbus protocol is performed by exchanging messages in both directions on a multidrop bus, via a serial link module with an asynchronous link. Dialog between the higher processing levels and the OsiSense XG system is of the question/answer type. The initiator (master station) sends the messages to be executed to the OsiSense XG Smart Antenna (slave station), which answers after execution. With the Modbus protocol, the OsiSense XG Smart Antenna communicates in RTU (Remote Terminal Unit) mode.

Information coding principle:

Characteristics	8 RTU bits
Coding system	8-bit binary code
Number of bits per character ● Start bit ● Significant bits ● Parity ● Stop bit	 ● 1 ● 8 ● Even / Odd / None ● 1 / 2
Message structure ● Message ● Check ● End of frame	 ● Modbus frame ● CRC ● 3-character silence

Exchange Principles

Dialog between the PLC (or computer) and the OsiSense XG Smart Antenna is of the question/answer type. The slave station responds immediately to any message transmitted by the master (PLC) station. The function is the response time:

- The command processing time (which depends on the amount of data to be exchanged and the type of tag)
- The speed on the serial link
- The length of the message

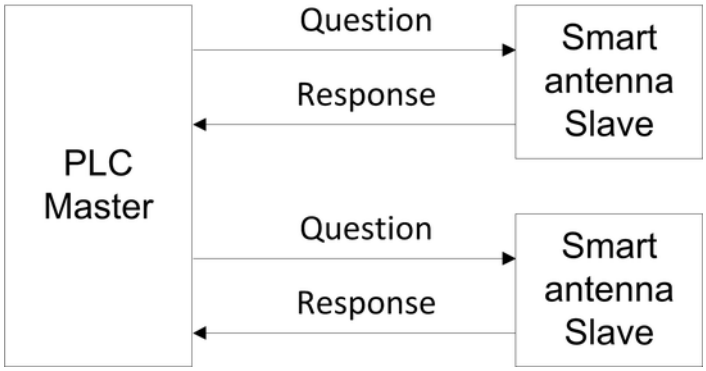

Connection

For more detailed explanations on installation and connection, see *Installing the System, page 13*.

Supported Modbus Functions

The table below lists the supported Modbus functions:

Code		Type of request
Hex.	Dec.	
3	3	Read n registers (1 ≤ n ≤ 123)
6	6	Write One register
8	8	Diagnostics
B	11	Read event counters
10	16	Read n registers (1 ≤ n ≤ 123)
2B	43	ID

Point-to-point Mode

When the PLC is connected directly to a Smart Antenna, this Smart Antenna may operate in the point-to-point mode. In this operating mode, the Smart Antenna responds to requests sent to F8 as well as those sent to the network address of the Smart Antenna.

Diffusion Mode

In this operating mode, PLC sends requests to the 0 address and the slaves do not respond to Modbus requests.

This mode is not authorized for OsiSense XG Smart Antenna.

Requests

Read N Registers

This function is used to read tables of registers.

Read request:

Slave no.	Function code	Address of 1st register		Number of registers		Check
	3 h	Hi	Lo	Hi	Lo	
1 byte	1 byte	2 bytes		2 bytes		2 bytes (RTU mode)

- Slave no.: 01 h to 0Fh in multidrop mode or F8h in point-to-point mode
- Function code: 3 h
- Address of first register: Corresponds to the address of the first register to be read in the tag or the Smart Antenna (depending on the address)
- Number of registers: 1 ≤ N ≤ 123

Response:

Slave no.	Function code	Number of bytes read	Value of 1st register		Value of last register		Check
	3 h or 4 h		Hi	Lo	Hi	Lo	
1 byte	1 byte	1 byte	2 bytes		2 bytes		2 bytes (RTU mode)

- Slave no.: Same as read request
- Function code: Same as read request
- Number of bytes read: 2 to 246
- Value of the registers read: 0000 h to FFFFh
- If there is no tag present, the Smart Antenna sends a detected error report (see *Detected Error Messages, page 57*).

Write One Register

Write request:

Slave no.	Function code	Address of register		Register Value		Check
	6 h	Hi	Lo	Hi	Lo	
1 byte	1 byte	2 bytes		2 bytes		2 bytes (RTU mode)

- Slave no.: Same as read request
- Function code: 6 h
- Address of register: Same addressing field as for the read request
- Register values: 0000 h to FFFFh

Response:

Slave no.	Function code	Address of register		Register Value		Check
	6 h	Hi	Lo	Hi	Lo	
1 byte	1 byte	2 bytes		2 bytes		2 bytes (RTU mode)

The response is an echo of the request, indicating that the value contained in the request has been taken into account by the Smart Antenna.

Write N Registers

Write request:

Slave no.	Function code	Address of 1st register		Number of registers		Number of bytes	Value of 1st register				Value of last register		Check
	10 h	Hi	Lo	Hi	Lo		Hi	Lo			Hi	Lo	
1 byte	1 byte	2 bytes		2 bytes		1 byte	2 bytes				2 bytes		2 bytes (RTU mode)

- Slave no.: Same as read request
- Function code: 10 h
- Number of registers: 1 ≤ N ≤ 123
- Number of bytes: Twice the number of registers
- Register values: 0000 h to FFFFh

Response:

Slave no.	Function code	Address of 1st register written		Number of registers written		Check
	10 h	Hi	Lo	Hi	Lo	
1 byte	1 byte	2 bytes		2 bytes		2 bytes (RTU mode)

- Slave no.: Same as request
- Function code: Same as request
- Address of first register written: Same as request
- Number of registers written: Same as request

Read Diagnostic Counters Code 08 h

Functions 08 h and 0Bh are used to check the PLC/Smart Antenna link and operate the event counters (or diagnostic counters).

Request:

Slave no.	Function code	Sub-function code		Data		Check
	08 h	Hi	Lo	Hi	Lo	
1 byte	1 byte	2 bytes		2 bytes		2 bytes (RTU mode)

Response:

Slave no.	Function code	Sub-function code		Data		Check
	08 h	Hi	Lo	Hi	Lo	
1 byte	1 byte	2 bytes		2 bytes		2 bytes (RTU mode)

Designation of the event counters:

Sub-functions	Counter	Description
0Bh	1	Number of requests correctly received by the Smart Antenna, whether that Smart Antenna is affected
0Ch	2	Number of requests received with CRC errors
0Dh	3	Number of detected error messages sent back by the Smart Antenna (fault message), or not sent back in the event of broadcasting
0Eh	4	Number of correct requests specifically addressed to the Smart Antenna (apart from broadcasting)
0Fh	5	Number of broadcast requests received and correctly processed

Sub-functions	Counter	Description
10 h	6	Number of executions not carried out due to communication with the tag not being possible
12	7	Number of detected faults due to incorrect characters (format, parity, and so on) received by the Smart Antenna
00 h	-	Mirror function
0Ah	8	Reset event counters function

Read Events Code 0Bh

Functions 08 h and 0Bh are used to check the PLC/Smart Antenna link and operate the event counters (or diagnostic counters).

Read events code 0Bh sends back the number of requests received by the Smart Antenna and correctly executed.

Request:

Slave no.	Function code 0Bh	Check
1 byte	1 byte	2 bytes (RTU mode)

Response:

Slave no.	Function code	Counter		Data		Check
	0Bh	00	00	Hi	Lo	
1 byte	1 byte	2 bytes		2 bytes		2 bytes (RTU mode)

Identification Request

Function 2Bh: This function is used to identify the Smart Antenna.

Read request:

Slave no.	Function code	MEI *	Read Device ID code	Object ID
	2Bh	0Eh	01 h, 02 h, 03 h	00 h

*: MEI = Modbus Encapsulated Interface

Response:

Index	Object name & description	Description	Data type
0 (0000h)	Manufacturer's name	TELEMECANIQUE	ASCII string
1 (0001h)	Product code	Ositrack XGC-S	
2 (0002h)	Version number	Vx.y (for example: V3.6)	

Detected Error Messages

When an anomaly in the message (or during its execution) is detected by the Smart Antenna to which it is addressed, the Smart Antenna sends back a detected error message to the master system.

Syntax:

Slave no.	Function code	Detected error code	Check
1 byte	1 byte	1 byte	2 bytes (RTU mode)

- Slave no.: Same as request
- Function code: Same as the function code and most significant bit of the byte set at 1

Examples:

- Function code of the detected error message after a read request:
  83 h = (80 + 03) or 84 h = (80 + 04)
- Function code of the detected error message after a write request:
  90 h = (80 + 10)

Detected error code:

- 1 h: Unknown function code or incorrect request format
- 2 h: Incorrect address or prohibited zone or protected zone or address outside the tag memory zone
- 3 h: Incorrect data too much or not enough data in the frame, or quantity = 0, or data incompatible
- 4 h: Execution detected error (in read or write mode, or tag missing)

Programming

Application Example

A splitter box and a M340 PLC are connected to a Modbus network.

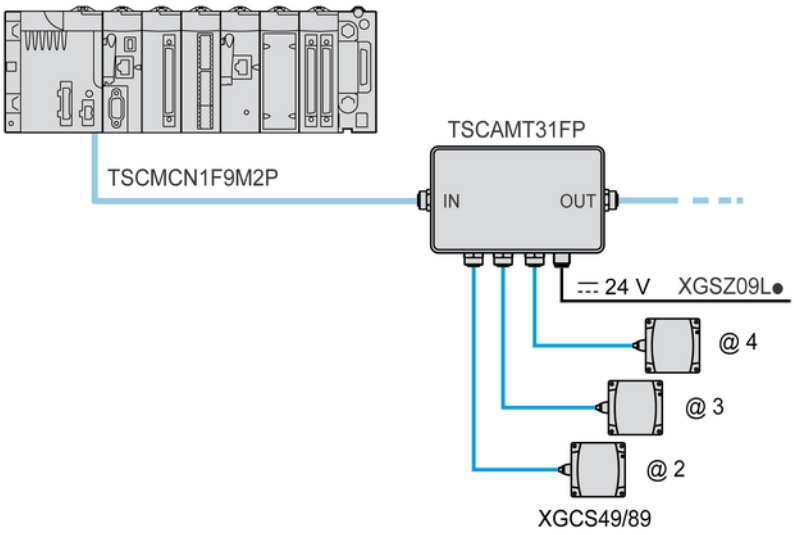

Example of Program in Unity Pro

Program: Read 5 registers in the tag starting at register %MW0 of the tag with Smart Antenna @ 2.

LADDER programming:

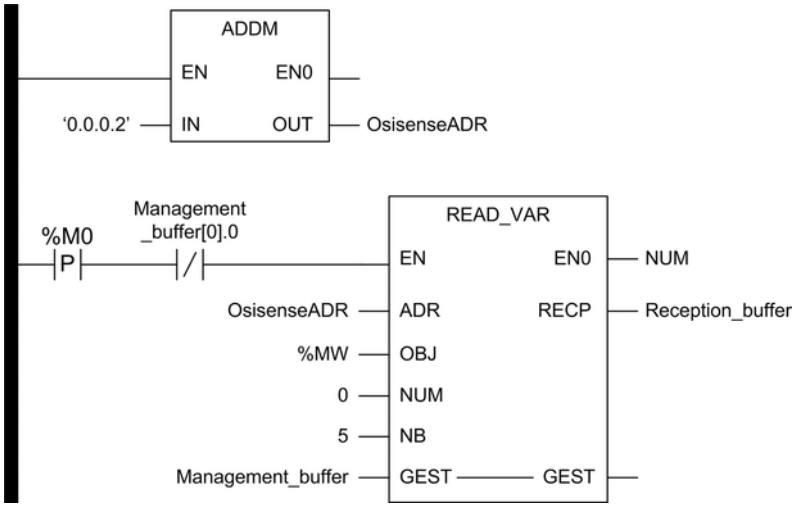

Structured Text programming:

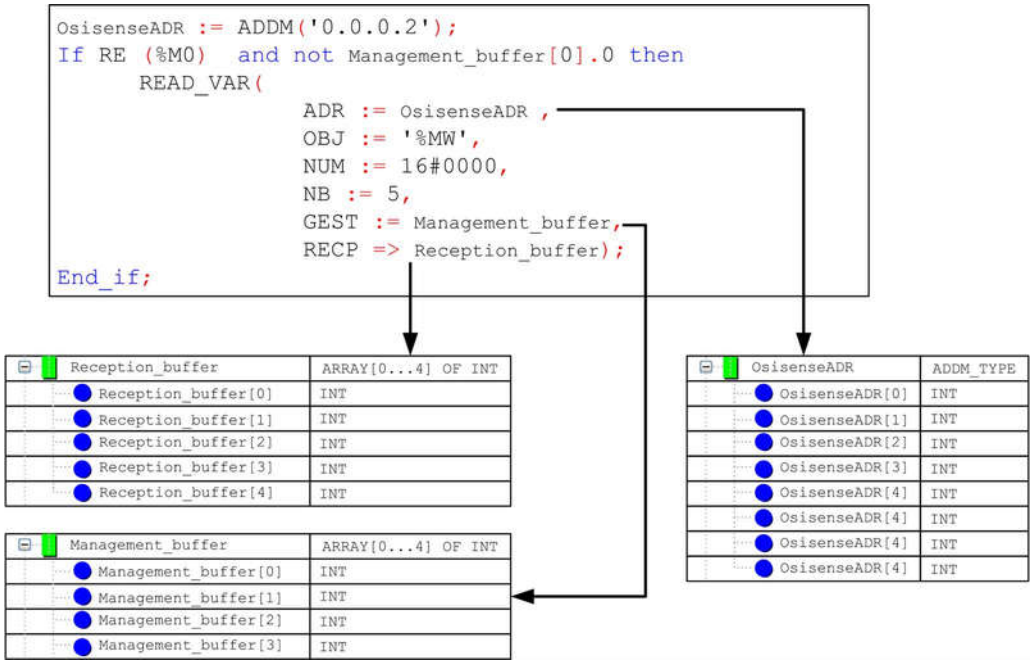

Chapter 6
Diagnostics

Diagnosing a Fault

Meaning of the 2 LEDs

The 2 two-tone LEDs on the Smart Antenna display all the operating states of the Smart Antenna:

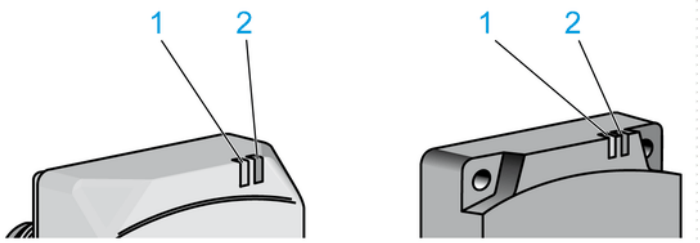

1 **TAG** LED
2 **COM** LED

Description of the states of the LED tag (**TAG**):

Smart Antenna status	LED	Description
Tag not present	Series of green flashes (periodic)	Number of flashes = network address of the Smart Antenna
Tag present	Continuous green	Tag present in the dialog zone Read/Write functions activated
	Red	Communication error with the tag

Description of the states of the LED communication (**COM**):

Smart Antenna status	LED	Description
No network communication	Orange	Pending network data for automatic configuration after the power is turned on (with a duration of 7 seconds), then the LED is switched off and the Smart Antenna is returned to its last configuration stored in the memory
Network communication	Green	Sending or receiving messages (addressed to the Smart Antenna) in the network
	Red	Network communication error

Result of the Self-Test

When the power is turned on, a self-test detects any faults on the Smart Antenna subassemblies.

In the event of a fault, the network communication LED flashes 8 times in succession, and the color of each of these 8 flashes indicates the result of the test:

Flash	Test	Result
1	Flashing test (checksum test)	Green if OK, Red if faulty
2	RAM test (read/write tests)	Green if OK, Red if faulty
3	EEPROM test (log)	Green if OK, Red if faulty
4	Line inversion test	Green if OK, Red if D0 and D1 are inverted
5	Analog/digital converter test	Green if OK, Red if faulty
6	Reader and bus tests (read/write test)	Green if OK, Red if faulty. If there is a fault, the bus Address and Data bits alternate between states 1 and 0 while the 8 flashes are being transmitted so that the buses can be tested using an oscilloscope and any faults will be detected.

Flash	Test	Result
7	Internal clock test	Green if OK, Red if faulty
8	Watchdog test	Green if OK, Red if faulty (watchdog not working)

NOTE: If the tests do not show up any faults, the 8 consecutive flashes do not take place.

NOTE: Following a self-test, an LED function test is performed; 1 red flash followed by a green one at each LED

Program Version

The program version of the Smart Antenna is available via a request of word reading at the 87FFh address (for example: 3870 h for Version 3.87).

Chapter 7
Wiring Examples / FAQs

Aim of This Chapter

This chapter contains wiring examples and FAQs for OsiSense XG Smart Antennas.

What Is in This Chapter?

This chapter contains the following topics:

Topic	Page
Wiring Examples	64
FAQ	69
M221 Programming Example	74

Wiring Examples

Several Smart Antenna + Twido

An example of a Modbus network wiring between a PLC Twido and several OsiSense XG Smart Antennas using splitter joints:

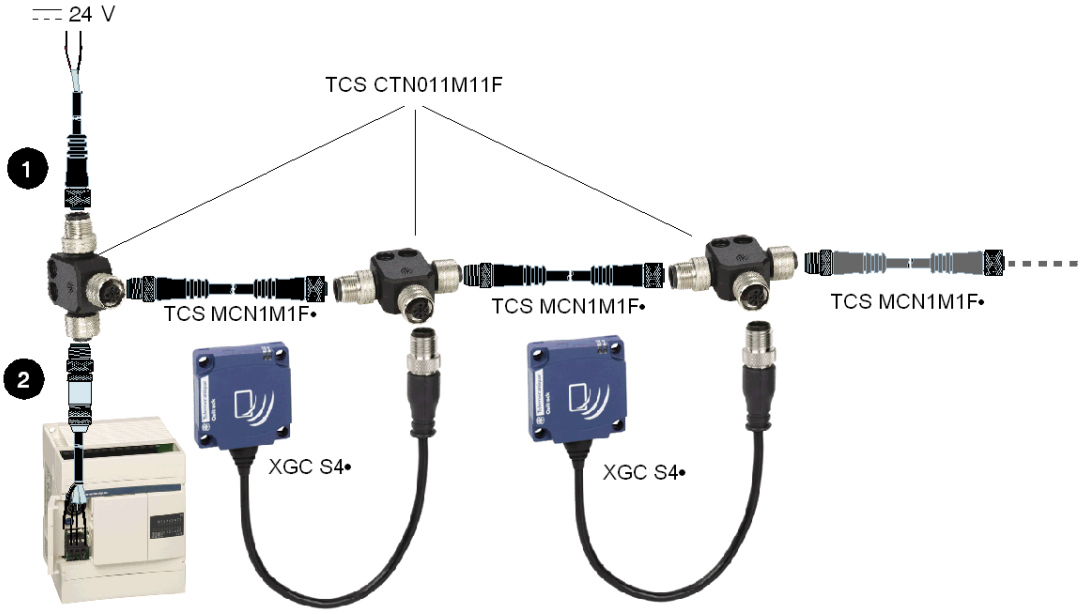

1 Connecting the Power Supply-Tee Cable:

XGSZ09L•				ABL8 Power Supply
Diagram	**Contact**	**Signal**	**Wire color**	**Terminal**
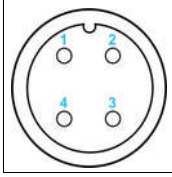	1	NC	-	-
	2	⎓ 24 V	Red	⎓ 24 V
	3	0 V/GND	Black	0 V/GND
	4	NC	-	-

2 Connecting the TWIDO-Tee Cable:

Connector FTXCN12M5 (male) + cable			Twido	
Diagram	**Contact**	**Signal**	**Terminal**	**Diagram**
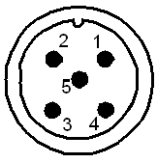	1	(SHLD) drain	-	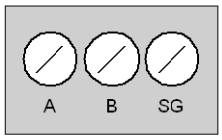
	2	**DO NOT CONNECT**	-	
	3	0 V/GND	SG	
	4	D0	B	
	5	D1	A	

⚠ WARNING

EQUIPMENT DESTRUCTION

Do not connect terminal 2 of the connector. Terminal 2 of the connector is linked to a power supply of 24 Vdc of the OsiSense XG Smart Antenna. It is necessary not to connect it with the link cable to the PLC.

Failure to follow these instructions can result in death, serious injury, or equipment damage.

Smart Antenna + M251

Example of a Modbus wiring between a M251 and a Smart Antenna:

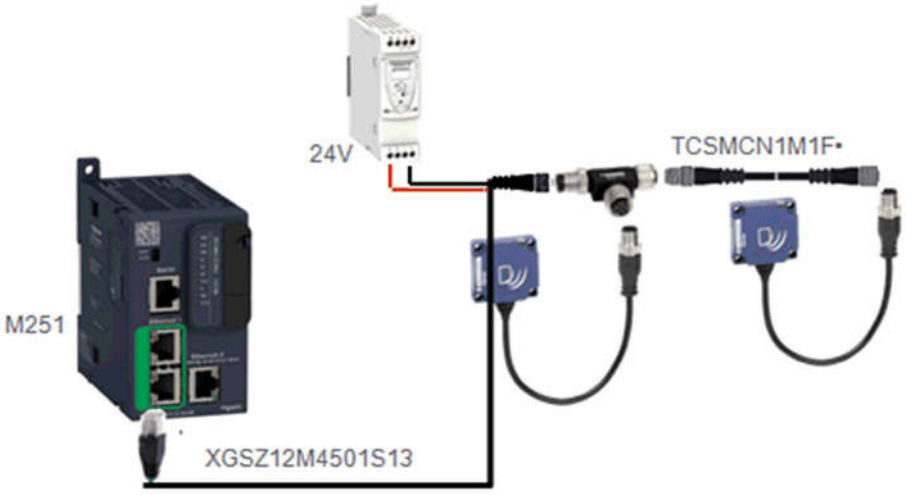

This network length must not exceed 15 m. Beyond, replace the XGSZ12M4501S13 cable by: XBTZ9980 cable + TWDXCAISO box + TCSMCN1M1F• cable.

Smart Antenna + XBTN

Example of a Modbus wiring between an XBTN visual display unit and a Smart Antenna:

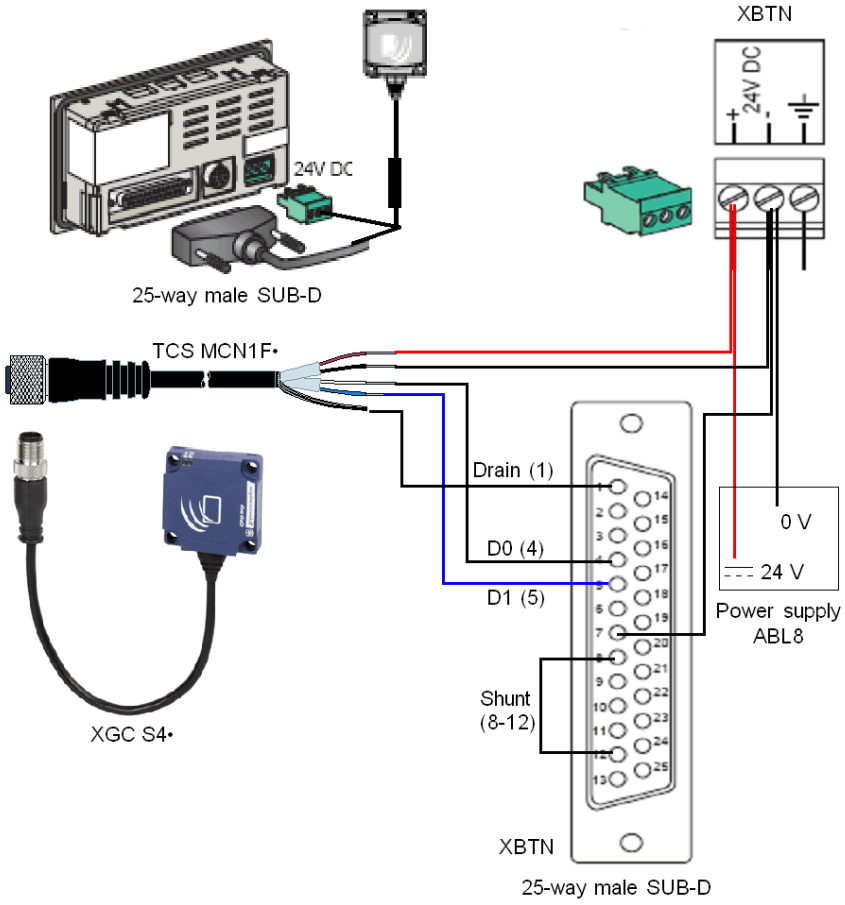

Connection:

TCSMCN1F•				XBTN	
Diagram	Contact	Signal	Wire color	25-way male SUB-D	Power supply terminal
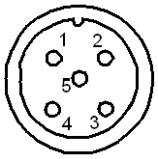	1	(SHLD) drain	-	1	-
	2	⎓ 24 V	Red	-	⎓ 24 V
	3	0 V/GND	Black	-	0 V
	4	D0	White	4	-
	5	D1	Blue	5	-

2 Smart Antennas + PCMCIA RS 485 Card

An example of wiring between a PLC equipped with a PCMCIA - RS 485 communication card and two Smart Antennas:

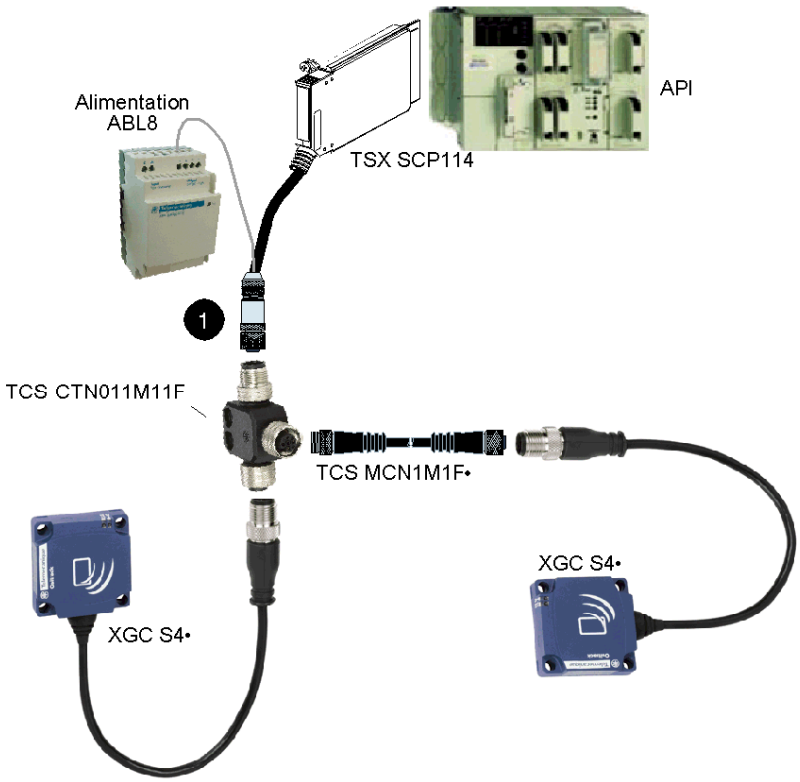

1 Connecting the cable of the PCMCIA card + power supply cable - Tee:

Connector FTXCN12F5 (female)			Card TSXSCP114	ABL8 Power Supply
Diagram	Contact	Signal	Wire color	Signal
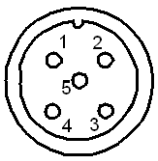	1	(SHLD) drain	(SHLD) drain	-
	2	⎓ 24 V	-	⎓ 24 V
	3	0 V/GND	Red/White Pair	0 V
	4	D0	Blue	-
	5	D1	White	-

Smart Antenna - PC

Example of wiring between a PC and a Smart Antenna (use of the RS 232/RS 485 converter: XGSZ24):

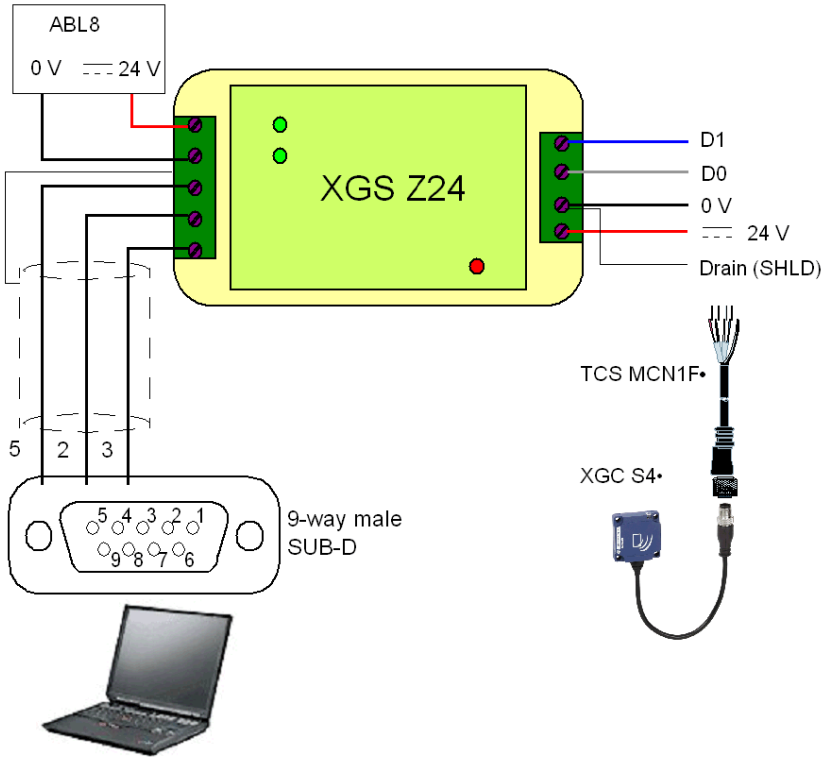

Cable connection TCSMCN1F•

TCSMCN1F•			
Diagram	Contact	Signal	Wire color
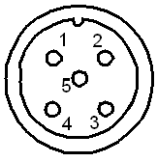	1	(SHLD) drain	-
	2	24 V	Red
	3	0 V/GND	Black
	4	D0	White
	5	D1	Blue

Smart Antenna + Twido

Example of a Modbus wiring between a Twido and a Smart Antenna:

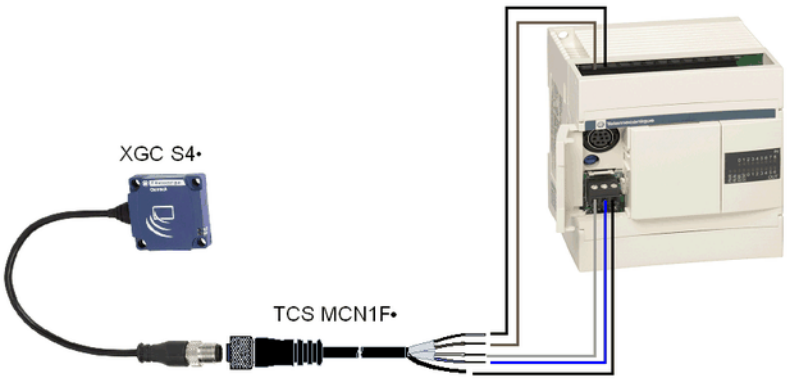

TWIDO-Smart Antenna cable:

TCSMCN1F•				Auxiliary Twido port		Twido entries
Diagram	Contact	Signal	Wire color	Terminal	Diagram	DC OUT
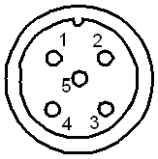	1	(SHLD) drain	-	-	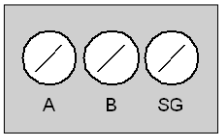	-
	2	⎓ 24 V	Red	-		⎓ 24 V
	3	0 V/GND	Black	-		0 V/GND
	4	D0	White	B		-
	5	D1	Blue	A		-

NOTE:
To provide power supply to the Smart Antenna from the upper Twido terminal, the **0 V DC OUT** and **DC IN COM** must be reconnected:

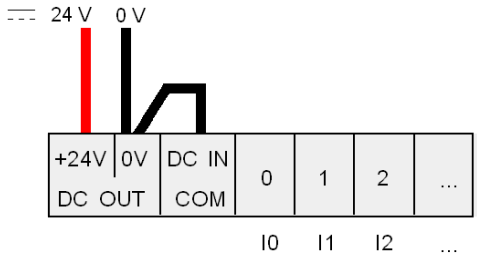

FAQ

Detected Errors in Reading/Writing a Tag

How to avoid making detected errors in reading/writing a tag?

To avoid making detected errors in reading/writing a tag, it is necessary to check the tag presence between making the request.

1: Use a sensor:

Synchronize the read/write requests with a sensor that indicates the presence of the tag to the control system:

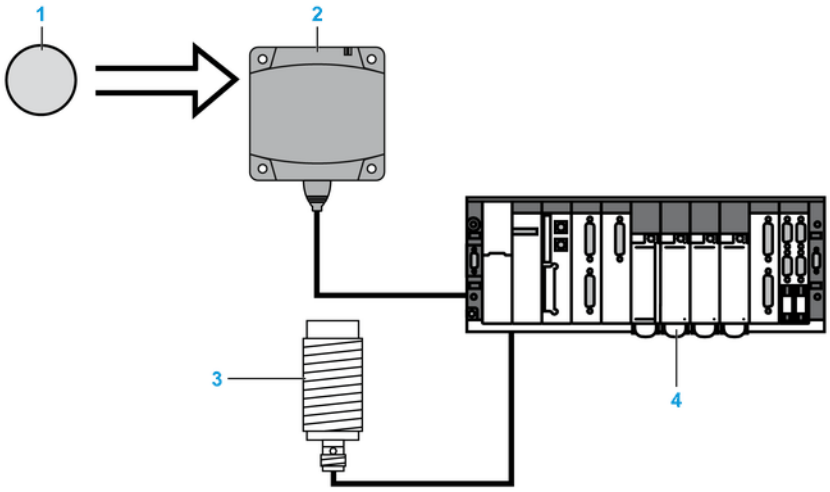

1 Tag
2 Smart Antenna
3 Tag presence sensor
4 PLC

In case of processing detected errors (such as incorrect positioning of the tag or a transmission error), provide for repetition of the request before switching to the "Fallback" mode (abandoning of the request and generation of an alarm).

2: Read the STATUS register of the Smart antenna:

Before initiating a tag read/write request, ensure that the tag is present using a request to read the Smart Antenna STATUS register (bit 0 of the STATUS register = 1 if the tag is present).

Protecting the Smart Antenna

How to protect the Smart antenna against shock?

To protect the system against shock, you can:

- Embed the Smart Antenna in metal (see *Assembly in the Metal, page 22*)
- Embed the tag in metal (see *Assembly in the Metal, page 22*)
- Protect the Smart Antenna by making use of its capability to work through non-metallic materials according to the diagram shown below:

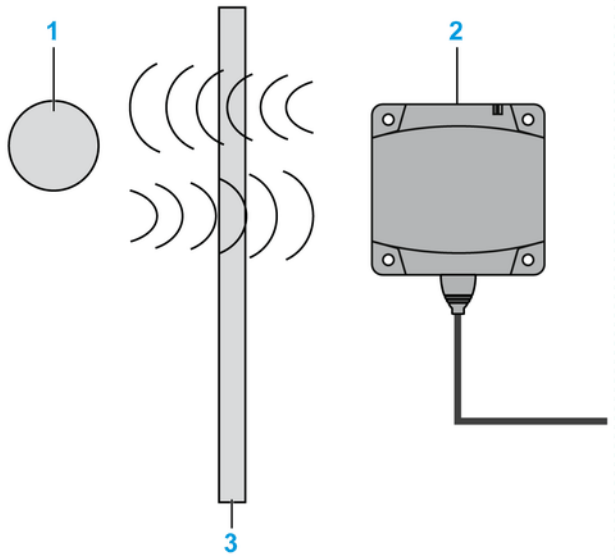

1 Tag
2 Smart Antenna
3 Non-metallic screen

NOTE: Thermal protection
Avoid exposing the tags to radiating heat sources, such as infrared dryers.

Network Address of the Smart Antenna / Maintenance

How to maintain the Smart antenna network addresses

To maintain the system, **leave address 1 free in the network**.

A new Smart Antenna (address 1 by default) may then be added without disturbing the network.

Example of addressing to maintain or replace the Smart Antenna:

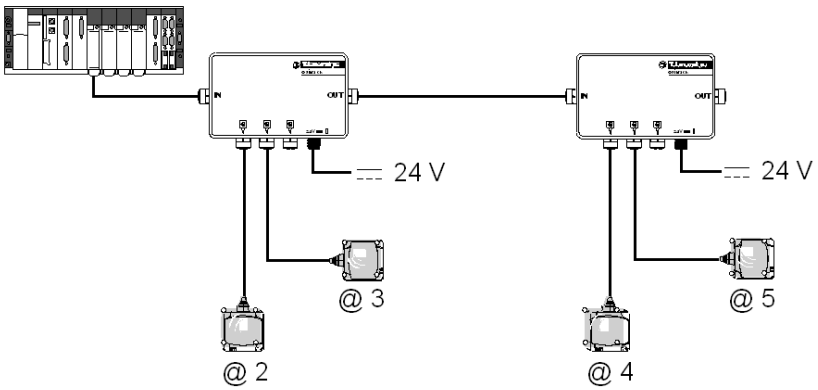

Maximum Cable Length

What is the maximum connection cable length of the Smart antenna?

Refer to Maximum Bus Length *(see page 27)*.

Line Terminator

How to insert the line terminator?

When there is a need for use (network > 100 m (328.083 ft)), the line terminator is positioned on the most remote segment in the master (see *Connection of Line Terminators in Modbus, page 28*).

COM Error

How to process the communication faults between the PLC and the Smart antenna?

There is a permanent risk of communication error in the reading or writing of a tag (disturbances, EMC, tag in the dialog zone limit...).

It is necessary to integrate the risk management into the PLC program:

- Process the error codes of the Smart Antenna (request for reading / writing is rejected since no tag is detected in front of the Smart Antenna, and so on.)
- Process the "Time-Out" when the Smart Antenna does not respond, such as "the message is not included following a disturbance".
- In the case of error, repeat the request (up to 3 times) before exiting and issuing a PLC alarm.

Replacing a Smart Antenna

How to replace a Smart antenna?

Step	Action
1	Disconnect the Smart Antenna to be replaced.
2	Locate the Smart Antenna network address to be replaced (plan, marking,...).
3	If other equipments are present in the network: interrupt the communication, such as by disconnecting the network master.
4	Connect the new Smart Antenna
5	Configure the Smart Antenna network address with the badge (see *Setting the Smart Antenna Parameters, page 34*). Consider locking the new address by showing a tag in front of the Smart Antenna.
6	Put the network into operation again.

Tag Write Number

How many times can it be written in a tag with EEPROM memory?

The maximum number of writing depends on the tag storage temperature: the higher the temperature is, the more this limit decreases

The OsiSense XG tags are provided for at most 100,000 tags per data bit in the defined storage temperature range.

If the tag is permanently at a temperature less than 30 °C (86°F) (the most frequent case), the maximum number of typical writings is **2.5 million**.

It is recommended to use tags with FeRAM memory in application when a high number of writing operations is required.

Smart Antenna Malfunction + Ethernet XGSZ33ETH Box

How to diagnose a malfunction in a configuration formed with Smart antennas + Ethernet XGSZ33ETH box?

Sending a reading request of the STATUS register from one of the Smart Antennas

If	then
no response returns after 2 seconds (default time-out of the Ethernet box)	there is an anomaly in the **Ethernet box** (IP addressing detected error or internal breakdown).
a negative response returns (with a default code),	the default is at the **Smart antenna** intended (Modbus address detected error, a default in the wiring between the box and the Smart Antenna or internal breakdown of the Smart Antenna).

Readable Data of a Moving Tag

What amount of data can be exchanged in a moving tag?

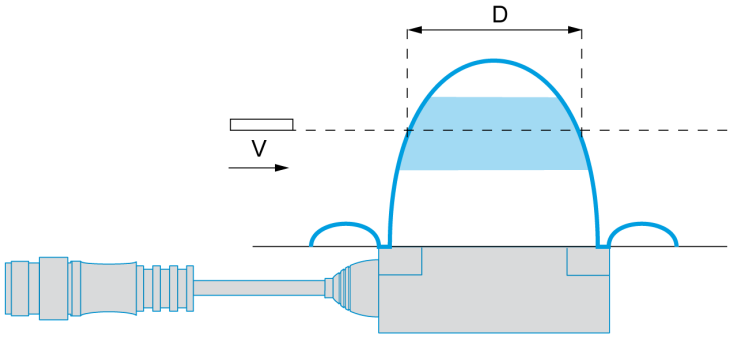

When the tag is not stopped during its movement in front of the Smart Antenna, it is necessary to:

Step	Action
1	Determine the speed **V** of the tag,
2	Determine the distance **D** between which the tag and the Smart Antenna can communicate.
3	Calculate **T**, the Tag/Smart Antenna communication duration, such as **T = D/V**
4	Use **T** in the table or the charts in paragraph. *(see page 50)*

⚠ CAUTION

RISK OF UNINTENDED EQUIPMENT OPERATION

Do not make a writing request when the tag exits the detection zone of the Smart Antenna (see *Sensing Zones, page 22*).

This may generate a tag-writing detected error or incorrect data writing.

Failure to follow these instructions can result in injury or equipment damage.

Provide Power to the Smart Antenna Using the Network Cable

Is it possible to provide power to the Smart antenna using the network cable?

Yes, but it is necessary to take into account the cable length and line voltage outage (depending on the cable used and Smart Antenna consumption).

In practice, Smart Antenna consumption is less than the characteristics given (approximately 30 mA). The cable length may measure up to 250 m (820.2 ft) without running the risk of faults.

Problems in the First Tag-Reading Requests

In a Modbus network, the Smart antenna does not always respond to the first tag-reading requests after turning on the power.

Take into consideration the initialization time of the Smart Antenna after turning on the power. It is recommended to check if the Smart Antenna is in the condition to respond before attempting to read or write a tag:

- When the power is turned on, the Smart Antenna does a self-test.
- The Smart Antenna must also detect the protocol, speed, and transmission format by analyzing the first frames circulating in the network.

This verification can be performed by sending reading requests of the system STATUS register from the Smart Antenna (bit 1 = 1 during the parameter-setting phase after the power is turned on).

Smart Antenna Addresses Are Limited to 15

Why is the Smart antenna address limited to 15?

In practice, the number of Smart Antennas connected to the same network rarely exceeds 10.

In practice, the addressing principle per configuration badge must necessarily be above 15 (counting the flashes on the Smart Antenna LED).

For important installations, give priority to Ethernet, the network for which OsiSense XG proposes "clusters" of three Smart Antennas for each splitter box.

Using non-Schneider-Electric Tags

What is the dialog distance between an OsiSense XG Smart antenna and a tag purchased at an external Schneider-Electric provider?

There is no normalization of the reading distances. Each tag with its own characteristics cannot allow a dialog distance.

It is imperative to test a sample to determine the proper dialog distance.

Compatibility of Smart Antennas with Other 13.56 MHz Tags

Is my 13.56 MHz tag compatible with OsiSense XG Smart antenna?

The most reliable means is to send a sample to your Schneider agency to verify its compatibility.

Precautions Against EMC Perturbations

What are the precautions to be taken against EMC?

To avoid EMC perturbations, it is necessary:

- To use the intended splitter box since it integrates a supplementary EMC protection.
- Make sure that the Smart Antenna is at least 30 cm (11.81 in) from an EMC source (motor, solenoid valve, and so on).
- Use the intended cables (conceived to protect against EMC perturbations).

Metal Influence

What is the influence of metal on the Smart antenna/tag reading distances?

The presence of metal near an RFID tag affects the reading distances.

Some tags in the OsiSense XG range are protected to attenuate this phenomenon (XGHB44 and XGHB221346). Other references cannot be attached directly on a metallic support.

Tees / TCSAMT31P Splitter Box

Is it possible to use the tee joints instead of the TCSAMT31P splitter box?

Yes: see the example on wiring: *Several Smart Antenna + Twido, page 64*.

NOTE: When carrying out wiring, it is necessary to pay attention to the power supply wiring so as not to send 24 V to an equipment other than a OsiSense XG Smart Antenna.

Connecting a Smart Antenna to a PCMCIA RS485 Card

How to connect an OsiSense XG Smart antenna to a PCMCIA RS485 card?

See the example on wiring: *2 Smart Antennas + PCMCIA RS 485 Card, page 66*.

Connecting a Smart Antenna to a PC

How to connect an OsiSense XG Smart antenna to a PC?

An RS 232 / RS 485 converter capable of adapting serial link signals to those of the Smart Antenna must be used (See *Smart Antenna - PC, page 67*).

Connecting a Smart Antenna Directly to a Twido

How to connect a Smart antenna directly to a compact Twido PLC?

The Smart Antenna is fed direct power supply by using the 24 V Twido outlet (24 V for TOR entry power supply). (See *Smart Antenna + Twido, page 67*).

M221 Programming Example

Introduction

The following example uses a M221 controller linked to a OsiSense® XG Smart Antenna. The Smart Antenna address is 2 (*Address Configuration Via the XGSZCNF01 Badge, page 35*).

For wiring information, refer to the wiring example *(see page 65)*.

In this example, you are going to use 2 Modbus requests:

- Reading request of the STATUS register *(see page 41)* of the Smart Antenna to determine the presence of a tag.
- Writing request of values in the registers of the tag when it is present.

Configuration

SoMachine Basic configuration:

Step	Description
1	Create a new project.
2	Open the **Configuration** tab.
3	Add your M221 controller (click and scroll).
4	Select **SL1 Serial line**. Configure the serial line: ● Protocol: Modbus ● Physical medium: RS-485 ● …
5	Click **Apply** button.
6	Select **SL1 Serial line → Modbus**. Configure the Modbus **Protocol Settings**: ● Transmission mode: RTU ● Addressing: Master ● Response Timeout (x100 ms): 20 ● Time between frames (ms): 10
7	Click **Apply** button.

Programming

Open the **Programming** tab

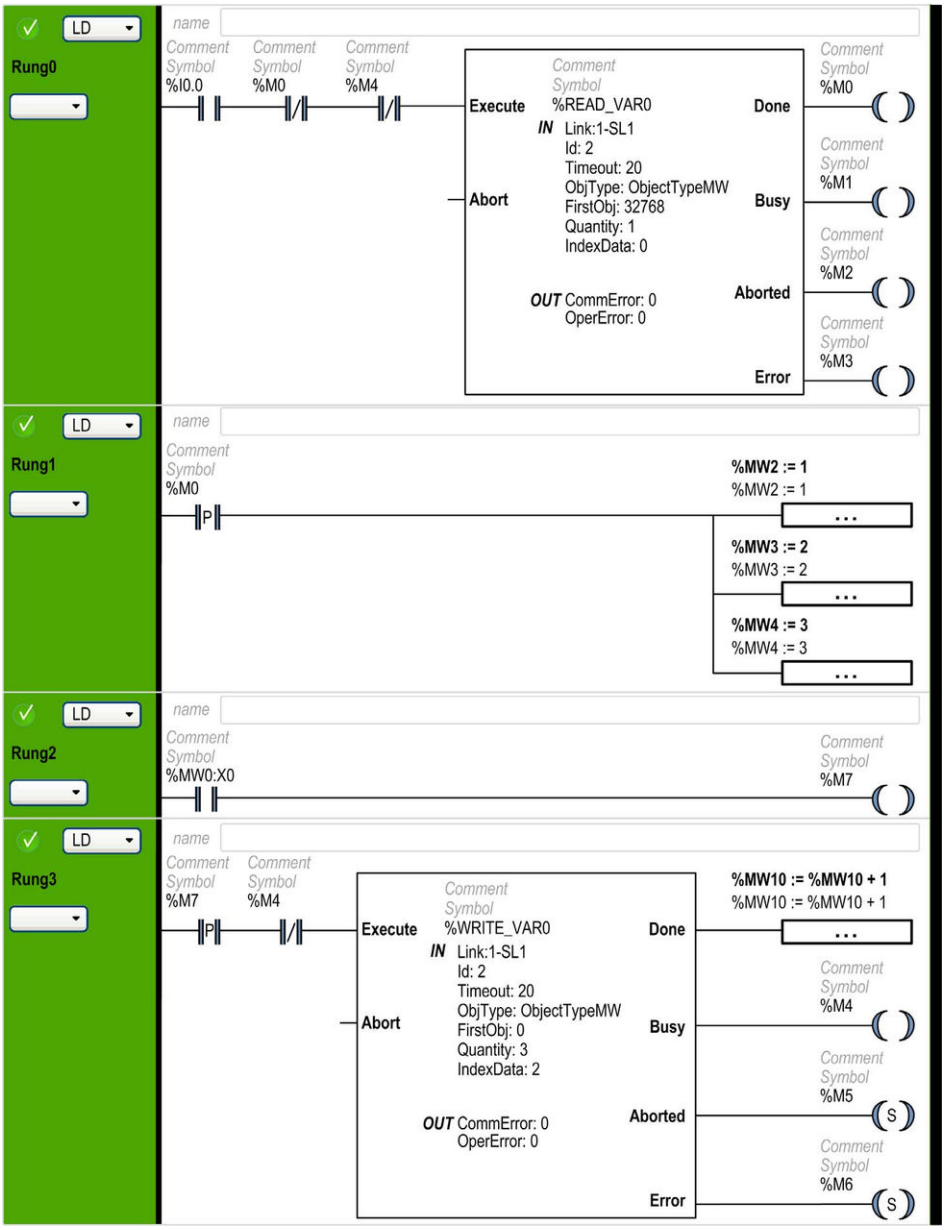

Rung	Description
0	Use the **Read_Var** function block to send a reading request of the STATUS register in the Smart Antenna to determine the presence of a tag. The result is stored in %MW0. **Read_Var** function configuration: ● ID: 2 = Modbus address of the Smart Antenna ● FirstObj: 32768 = 8000 h is the STATUS register *(see page 41)* to be read ● Quantity: 1 = quantity of register to read ● indexData: 0 = index of the first register in the Smart Antenna memory where are stored the values to read.
1	When the Read_Var function ends (%M0=1), values are written in Smart Antenna memory: ● %MW2=1 ● %MW3=2 ● %MW4=3
2	Store in %M7 if a tag is present.

Rung	Description
3	If tag is present (rising edge of %M7), use a **WRITE_VAR** function block to send a writing request. The function writes 3 registers %MW2…%MW4 of the Smart Antenna in the %MW0…%MW2 of the tag. **WRITE_VAR** function configuration: ● ID: 2 = Modbus address of the Smart Antenna ● FirstObj: 0 = Index of the first register in the tag where the values are written ● Quantity: 3 = quantity of register to write ● indexData: 2 = index of the first register in the Smart Antenna memory where are stored the values to write.

Glossary

!

%MW

According to the IEC standard, %MW represents a memory word register (for example a language object of type memory word).

A

ASCII

The american standard code for information interchange is a communication protocol for representing alphanumeric characters (letters, numbers, and certain graphic and control characters).

B

BYTE

When 8 bits are grouped together, they are called a `BYTE`. You can enter a `BYTE` either in binary mode or in base 8. The `BYTE` type is encoded in an 8-bit format that ranges from `16#00` to `16#FF` (in hexadecimal format).

C

configuration

The arrangement and interconnection of hardware components within a system and the hardware and software selections that determine the operating characteristics of the system.

CRC

cyclic redundancy check. Messages that implement this detected error checking mechanism have a CRC field that is calculated by the transmitter according to the message content. Receiving nodes recalculate the field. Disagreement in the 2 codes indicates a difference between the transmitted message and the one received.

E

EEPROM

Electrically Erasable Programmable Read-Only Memory. EEPROM is a nonvolatile memory.

EMC

electromagnetic compatibility. Devices that meet EMC requirements can operate within a system expected electromagnetic limits without interruption.

Ethernet

A LAN wiring and signaling specification used to connect devices within a defined area, for example, a building. Ethernet uses a bus or a star topology to connect different nodes on a network.

Ethernet II

A frame format in which the header specifies the packet type, Ethernet II is the default frame format for NIM communications.

EtherNet/IP

EtherNet/IP (the Ethernet Industrial Protocol) is especially suited to factory applications in which there is a need to control, configure, and monitor events within an industrial system. The ODVA-specified protocol runs CIP (the Common Industrial Protocol) on top of standard Internet protocols, like TCP/IP and UDP. It is an open local (communications) network that enables the interconnectivity of all levels of manufacturing operations from the office plant to the sensors and actuators on its floor.

F

FeRAM

Ferroelectric Random Access Memory. FeRAM is a nonvolatile memory offering faster write performance and greater number of writing cycles.

flash memory

Flash memory is nonvolatile memory that can be overwritten. It is stored on a special EEPROM that can be erased and reprogrammed.

function block

A function block performs a specific automation function, such as speed control. A function block comprises configuration data and a set of operating parameters.

function code

A function code is an instruction set commanding 1 or more slave devices at specified addresses to perform a type of action, for example, read a set of data registers and respond with the content.

H

HMI

human-machine interface. An operator interface, usually graphical, for industrial equipment.

HTTP

hypertext transfer protocol. The protocol that a web server and a client browser use to communicate with one another.

I

IEC

International Electrotechnical Commission Carrier. Founded in 1884 to focus on advancing the theory and practice of electrical, electronics, and computer engineering, and computer science. EN 61131-2 is the specification that deals with industrial automation equipment.

IP

Internet Protocol. That part of the TCP/IP protocol family that tracks the Internet addresses of nodes, routes outgoing messages, and recognizes incoming messages.

IP rating

Ingress Protection rating according to IEC 60529.

L

LAN

local area network. A short-distance data communications network.

LSB

least significant bit, least significant byte. The part of a number, address, or field that is written as the rightmost single value in conventional hexadecimal or binary notation.

M

master/slave model

The direction of control in a network that implements the master/slave model is from the master to the slave devices.

Modbus

Modbus is an application layer messaging protocol. Modbus provides client and server communications between devices connected on different types of buses or networks. Modbus offers many services specified by function codes.

MSB

most significant bit, most significant byte. The part of a number, address, or field that is written as the leftmost single value in conventional hexadecimal or binary notation.

P

PELV

protective extra low voltage.

PLC

programmable logic controller. The PLC is the brain of an industrial manufacturing process. It automates a process as opposed to relay control systems. PLCs are computers suited to survive the harsh conditions of the industrial environment.

R

Register

Set of data encoded in a 16-bit format (WORD type).

RFID

radio frequency identification. RFID is a term used for radio frequency identification systems. These frequencies range between 50 kHz and 2.5 GHz. The most widely used is 13.56 MHz.

S

Smart Antenna

RFID reader incorporating all the RFID and network functions in the same device.

Structured Text

A program written in the structured text (ST) language includes complex statements and nested instructions (such as iteration loops, conditional executions, or functions). ST is compliant with IEC 61131-3.

subnet

A part of a network that shares a network address with the other parts of a network. A subnet may be physically and/or logically independent of the rest of the network. A part of an Internet address called a subnet number, which is ignored in IP routing, distinguishes the subnet.

T

TCP

transmission control protocol. A connection-oriented transport layer protocol that provides full-duplex data transmission. TCP is part of the TCP/IP suite of protocols.

U

UID

Unique ID. Identification number of the tag. Each tag has a different UID.

W

WORD

The WORD type is encoded in a 16-bit format