SUNON

SPECIFICATION FOR APPROVAL

CUSTOMER	:	
DESCRIPTION	:	**AXIAL AC FAN**
DIMENSIONS	:	**171X151X51 mm**
M O D E L	:	**A2175-HBL**
P/N	:	**TC.GN**
SUNON SPEC. NO.	:	**A17000660G-00**
APPROVAL NO.	:	
APPROVED BY	:	

(AUTHORIZED)

DRAWN	Kiki 4/29	CHECKED		APPROVED		SPEC.NO	A17000660G-00
						ISSUE DATE	04.28.2005
						EDITION	0
						REVISION DATE	
						E.SPEC	EA17103

建準電機工業股份有限公司
SUNONWEALTH ELECTRIC MACHINE INDUSTRY CO., LTD.
12FL., 120 CHUNG CHENG 1ST RD., TEL:886-7-7163069(41 LINES)
KAOHSIUNG, TAIWAN, R. O. C. FAX:886-7-7163086~89

建準電機工業(股)公司 研發部 94.06.13 發行章

MODEL NUMBERING SYSTEM

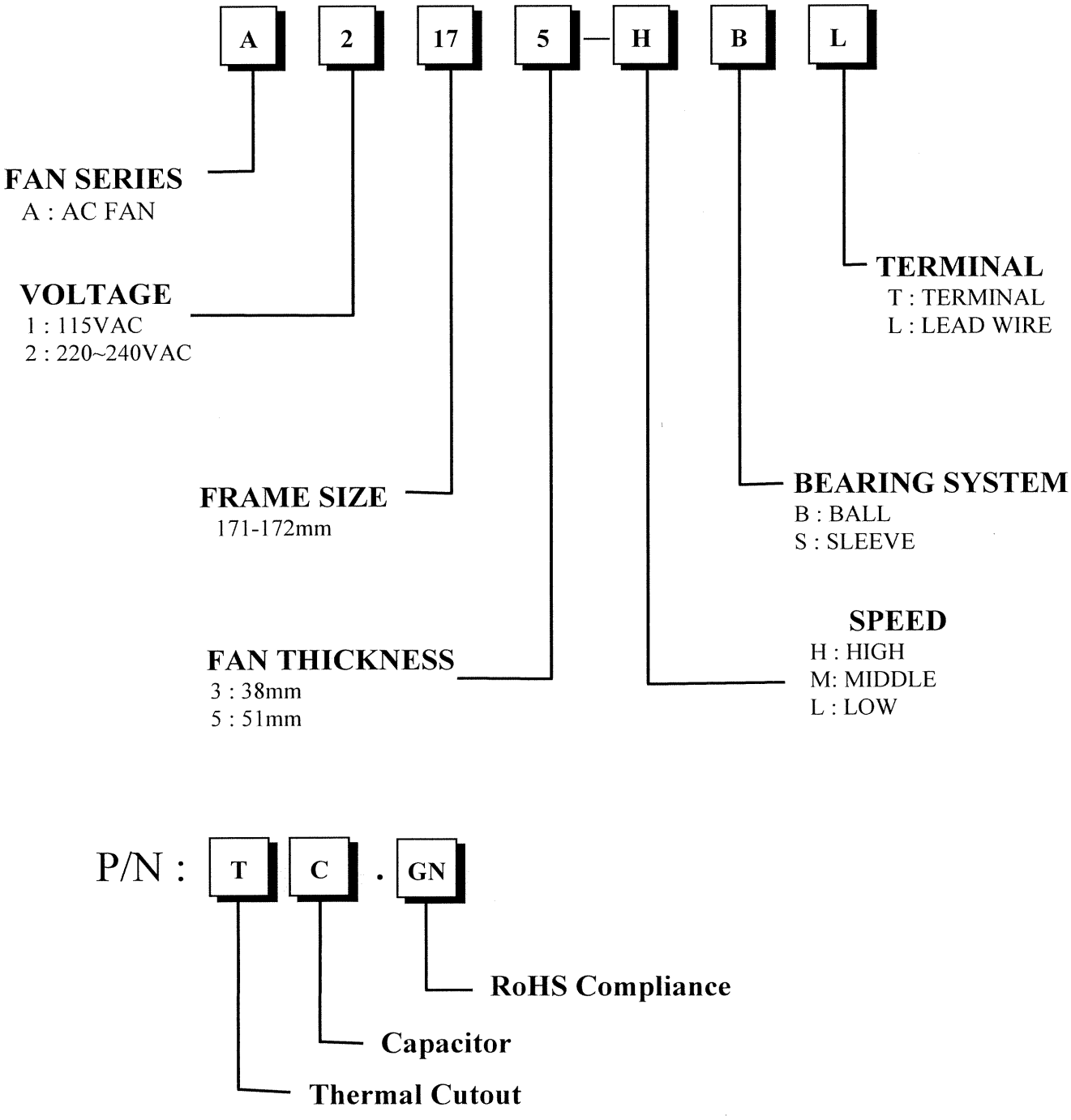

研發部 94.06.13 發行章

AXIAL AC FAN

MODEL : A2175-HBL

P/N : TC.GN

CHARACTERISTICS

1. Motor Design	:	Reliable Alveolate Motor Construction.
2. Insulation Resistance	:	500Megohms minimum at 500 VDC.
3. Dielectric Strength	:	1800 VAC for one second .
4. Motor Protection	:	Thermal protected & Class B (II)
5. Noise Level	:	Measured in a semi-anechoic chamber with background noise level below 15 dB(A). The fan is running in free air with the microphone at a distance of one meter from the fan intake.
6. Tolerance	:	±15% on rated power and current.
7. Air Performance	:	Measured by a double chamber. The values are recorded when the fan speed has stabilized at rated voltage.

建準電機工業(股)公司 研發部 94.06.13 發行章

SPECIFICATIONS

MODEL: A2175-HBL
P/N : TC.GN

1-1. Rated Voltage	: 220-240 VAC 50/60 HZ
1-2. Operating Voltage Range	: 150-250 VAC
1-3. Starting Voltage	: 150 VAC(25 deg. C POWER ON/OFF)
1-4. Rated Speed	: 2800/3200 RPM ± 10%
1-5. Air Delivery	: 203/239 CFM
1-6. Static Pressure	: 0.62/0.69 Inch-H_2O
1-7. Rated Current	: 0.11/0.11 AMP
1-8. Rated Power	: 25/26 WATTS
1-9. Noise Level	: 51/58 dB(A)
1-10. Direction of Rotation	: Clockwise viewed from front of fan blade
1-11. Operating Temperature	: -10 to +80 deg. C
1-12. Storage Temperature	: -30 to +80 deg. C
1-13. Bearing System	: Precision ball bearing system
1-14. Weight	: 908 g
1-15. Safety	: UL/CUR/CE/TUV Approvals
1-16. Vibration	: Vibration of acceleration 1.5G and frequency 5~50~5Hz is applied in all 3 directions(X,Y,Z), in cycles of 1 minute each, for a total vibration time of 30 minutes.

建準電機工業(股)公司 研發部 94.06.13 發行章

MODEL : A2175-HBL

P/N : TC.GN

PERFORMANCE CURVES

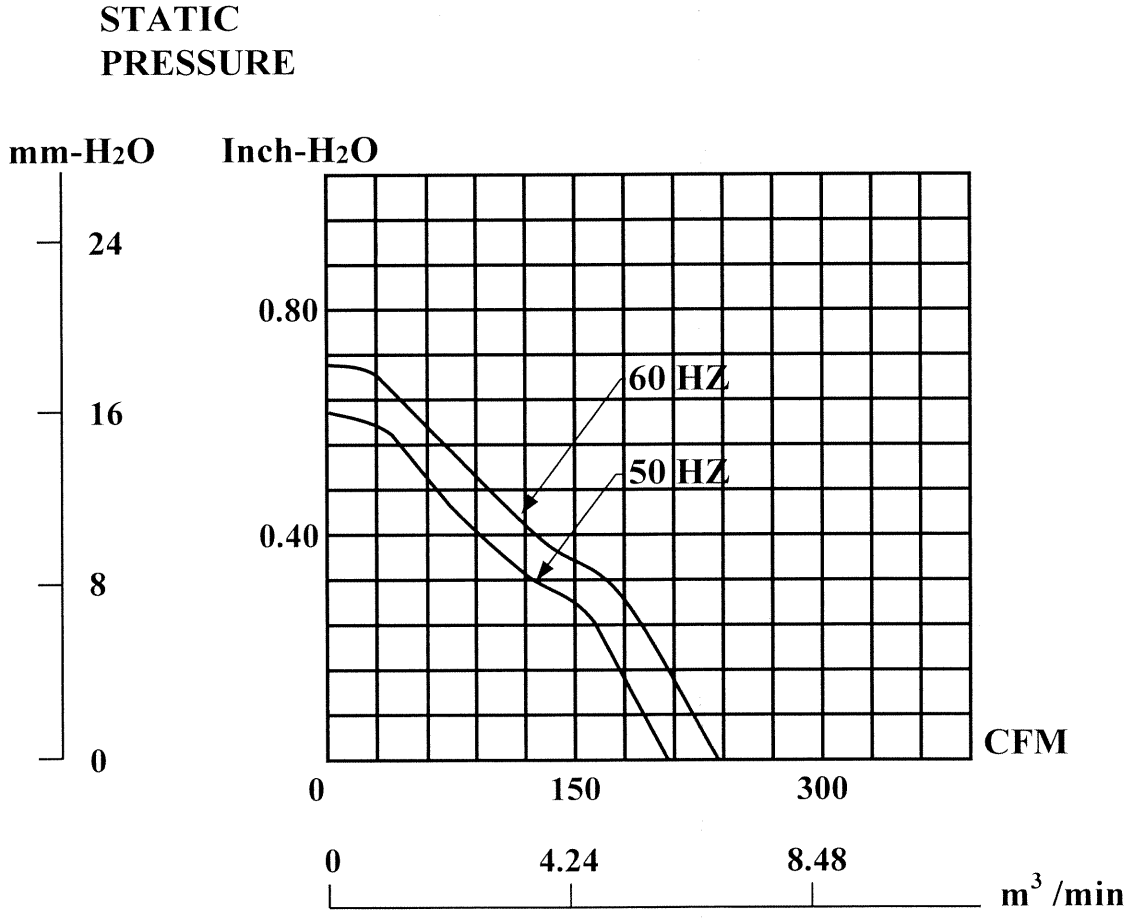

研發部 94.06.13 發行章

MATERIAL

2. Material

2-1. Frame	:	DIE-CAST ALUMINUM
2-2. Impeller	:	PC of UL 94V-0
2-3. Lead Wire	:	UL1007, 18 awg, BLACK

DIMENSIONS

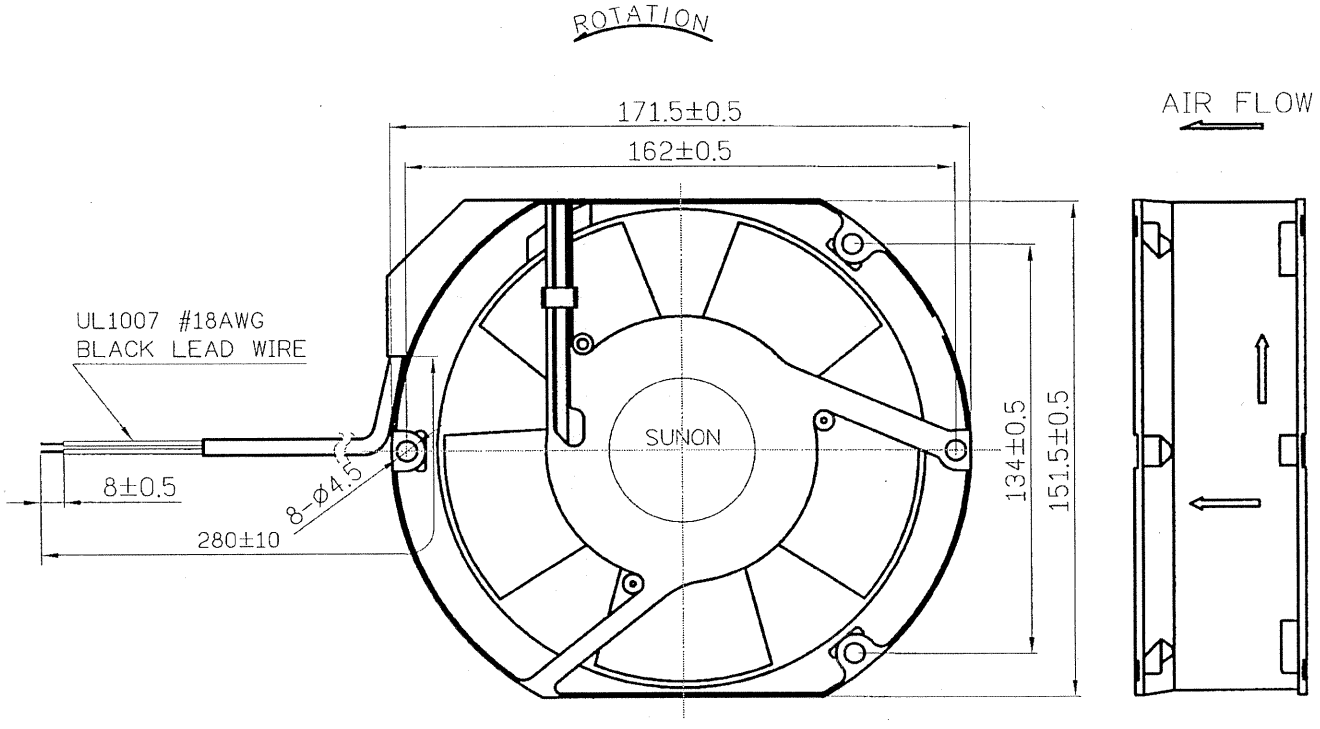

Air Flow Direction: Toward label side.

UNITS: mm

建準電機工業(股)公司 研發部 94.06.13 發行章

Alveolate Motor

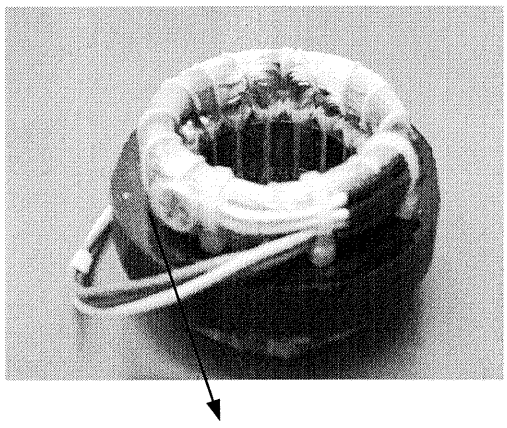

Thermal Cutout

With Capacitor

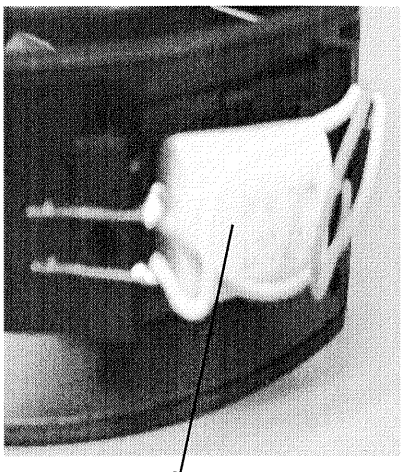

Capacitor

研發部
94.06.13
發行章

Notes

Ⅰ. Safety

1. SUNON will not guarantee this product if your application exceeds the limitations outlined in this specification.

2. There is no thermo-protector installed in this product, such as thermo-fuse, or current-fuse or thermo-protector. There may be smoking, ignition, or electric shock by insulation degradation in cases of motor lock, motor lead short circuit, overload, over voltage, and/or other failure. Please add the protection circuit to your product.

3. There is no reverse-connection prevention diode of VDC (+) and GND (-) installed in this product. Therefore, if VDC(+) and GND(-) are reverse connected, it may cause smoking, ignition, and/or destruction, although these conditions may not manifest immediately. We recommend that a protection device be installed on your product when there is a possibility of reverse-connection.

4. Please verify that this product is being installed and used in compliance with all safety standards. Please inform SUNON of any safety concerns prior to releasing your product to production.

5. Please handle and install this product carefully. Hitting or dropping this product may cause damage.

6. Please do not damage this product including coil and lead wires while installing or wiring. There may be smoking or fire.

建準電機工業(股)公司 研發部 94.06.13 發行章

Notes

Ⅱ . Specification modification

1.SUNON offers engineering assistance on fan installation and cooling system design.

2.Any change to the parameters specified in this document will be determined by mutual agreement between both parties. Parameters which are not specified in this specification will be identical to the final sample which has been approved by your company.

3.Product will be shipped in accordance with this specification unless Sunon has been previously notified of parameters requiring exception.

4.Parameters modified by mutual consent will be incorporated in this specification.

5.Please notify SUNON in advance of any modification to your product or new application for this fan which may require a review of this specification.

建準電機工業(股)公司 研發部 94.06.13 發行章

Notes

Ⅲ . Other

1. When building your device, please examine thoroughly any variation of EMC, temperature rise, life data, quality, etc. of this product by shock/drop/vibration testing, etc. If there are any problems or accidents in connection with this product, it should be mutually discussed and examined.

2. Fan holders or bearings may be damaged if touched with fingers or other objects. Additionally, static electricity (ESD) may damage the internal circuits. Please handle this product carefully.

3. Please avoid operating SUNON's product in poisonous material (organic silicon, cyanogens, formalin, phenol, etc.) or corrosive gas environments (H2S, SO2, NO2, Cl2, etc).

4. SUNON does not warrant performance safety against accidents caused by dust, water, droplets, dew, bugs, etc.

5. Please advise us in advance if you require documents for export.

6. Improper mounting may cause harsh resonance, vibration, and noise. Please mount securely.

7. Safety is a top priority. Please furnish guard accessories to prevent injury to personnel.

8. Unless otherwise noted, all tests are conducted at 25°C ambient temperature and 65% relative humidity.

9. Always ensure that fans are stored according to the storage temperatures specified. Do not store in a high humidity environment. If the fans are stored for more than 6 months, SUNON recommends functional testing before using.

10. SUNON reserves the right to use components with equivalent specifications from multiple sources.

建準電機工業(股)公司 研發部 94.06.13 發行章

Declaration of RoHS

Control declaration of environment- related substances/ materials

1.In accordance with the Restriction of Hazardous Substances (RoHS) Directive, Sunon product with P/N: GN models have complied with law and discipline not to employ the forbidden substances, and restrict the allowable concentration of some limited substances deliberately in our components.

No	Substance		Criteria
1	Halogens & its compounds (Substances depleting the ozone layer)		Forbidden
2	Chlorinated Organic Solvent		Forbidden
3	Lead and its compounds	Plastic (Frame, Impeller, wire harness, etc.)	＜100ppm
		Solder	＜1000ppm
		Iron Alloy	＜3500ppm
		Aluminium Alloy	＜4000ppm
		Copper Alloy	＜4wt%
4	Cadmium and its compounds	Solder	＜20ppm
		Cadmium Alloy	＜100ppm
		Plastic	＜5ppm
5	PBB and PBDE Category		Forbidden
6	PCB and PCT Category		Forbidden
7	CP		Forbidden
8	Mirex		Forbidden
9	PCN category		Forbidden
10	Hexavalent Chromium Compounds		＜100ppm
11	Mercury and its compounds		Forbidden
12	Asbestos		Forbidden
13	Organic Tin Compounds		Forbidden
14	Azo Compounds		Forbidden

建準電機工業(股)公司 研發部 94.06.13 發行章