DELTRON *Components Limited*

CONSOLE CASE

PRODUCT SPECIFICATION

Sheet No. **PS 0720**			
Date :	08.11.94	Issue No. 3 (29.09.95)	
Sheet 1 of 1		Signature	

Deltron Part No. **519-0920**

Dimensions

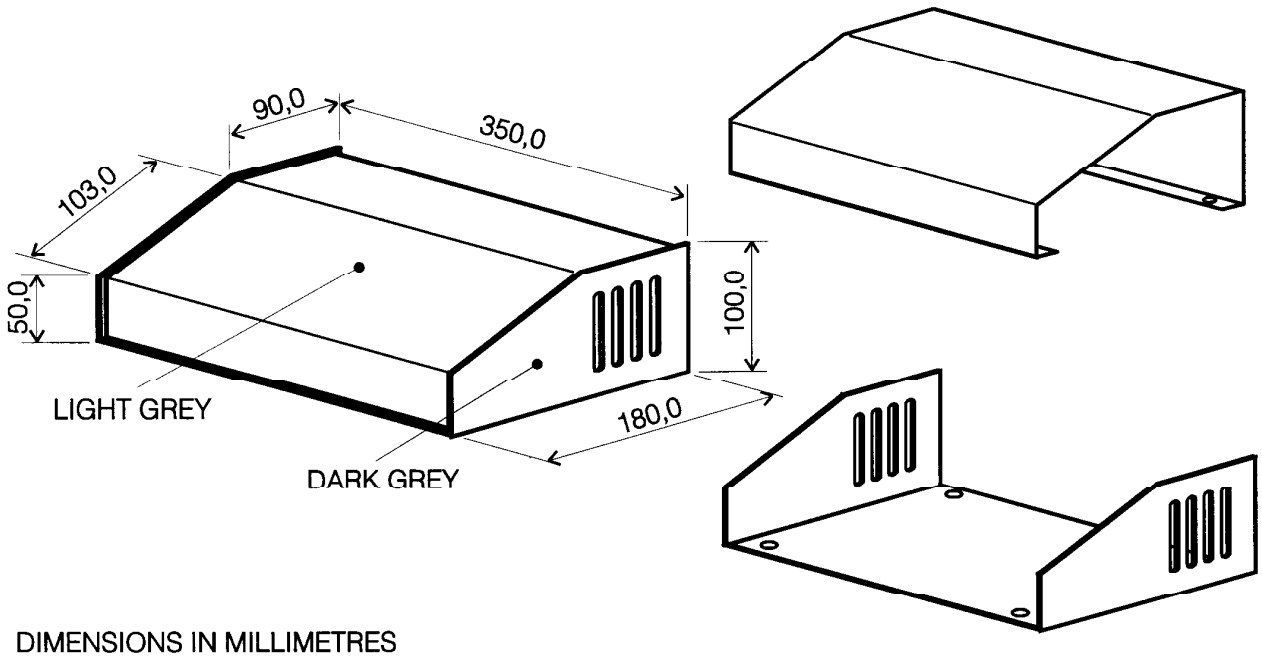

DIMENSIONS IN MILLIMETRES

Description

A range of enclosures that will accommodate common electrical / electronic products. They are ideally suited to housing small control consoles and power supplies.

The two part construction is robust, with ventilation slots on either side, and self-adhesive rubber feet.

Finished in a durable, attractive two-tone paint, these console cases are suited to most applications.

Features

MATERIALS

TOP PANEL : Aluminium,
1,2mm thick,
light grey paint, smooth

BASE : Mild Steel,
1,2mm thick
dark grey paint, textured

SCREWS : Mild Steel,
zinc plated

Deltron Components Limited, Atlas Road, London, NW10 6DN Tel: 0181 965 4222/5000 Fax: 0181 965 6130
Deltron Components Limited reserve the right to change specifications without notification.