Altech Corp.®
35 Royal Road • Flemington, NJ 08822-6000
t 908-806-9400 • f 908-806-9490 • www.altechcorp.com

R-Series - UL1077 Supplementary Protector - **3 pole D-Trip**

c UL us
E301611



Three Pole

Standard Pack: 6

Weight:
0.5A - 63A: 1.6kg (3.54 lb.)

Rated Current	Type/ Cat. No.
0.5A	3DU05R
1.0A	3DU1R
2.0A	3DU2R
3.0A	3DU3R
4.0A	3DU4R
5.0A	3DU5R
6.0A	3DU6R
8.0A	3DU8R
10A	3DU10R
12A	3DU12R
13A	3DU13R
15A	3DU15R
16A	3DU16R
20A	3DU20R
25A	3DU25R
30A	3DU30R
32A	3DU32R
40A	3DU40R
50A	3DU50R
60A	3DU60R
63A	3DU63R

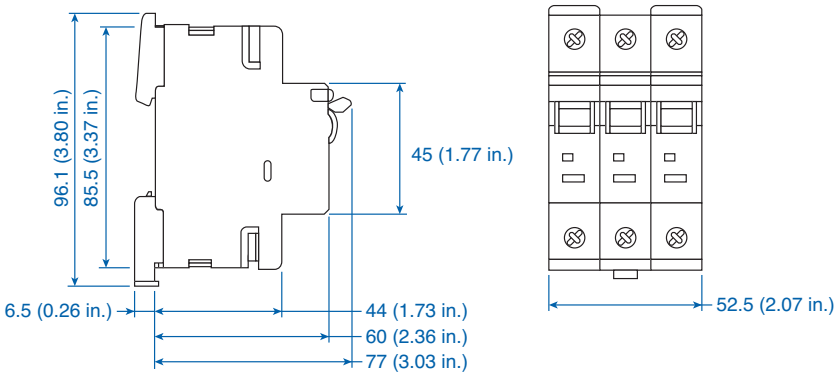

B, C and D Trip, Less than 10A

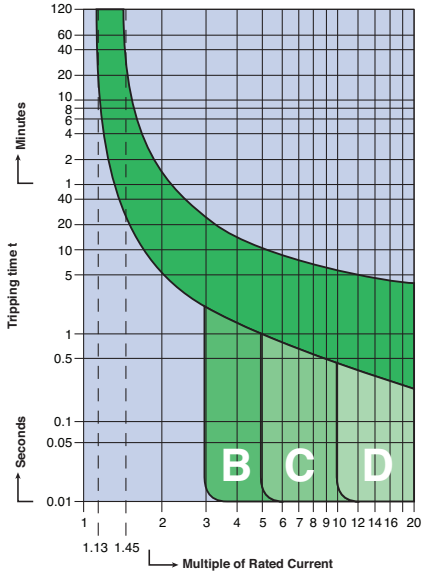

B, C and D Trip, 10A and higher

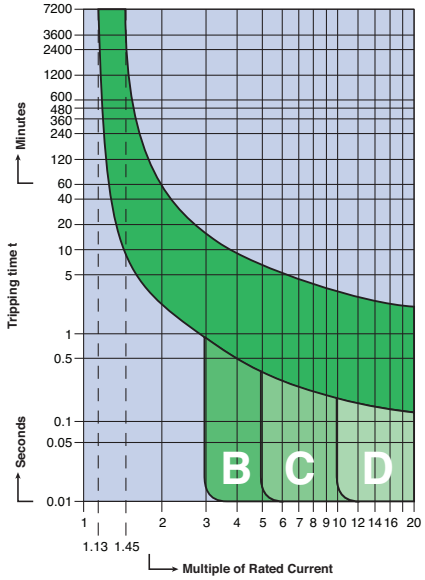

Voltage Rating	480Y/277VAC
Short Circuit Withstand Rating (UL - Ratings)	0.5-6A (RC): 10kA with no back-up fuse 8-63A (RC): 10kA with UL-listed Class J back-up fuse; 5kA with no back-up fuse
Interrupting Capacity (IEC/EN60898/60947-2)	0.5-63A (RC): 10kA
Calibration Temperature	30°C (86°F)
Operating Temperature	-25° to 60°C (-13° to 140°F)
Storage Temperature	-25° to 75°C (-13° to 167°F)
Terminal Size Acceptability:	
Solid Wire	18 AWG -10 AWG
Stranded Wire	18 AWG -3 AWG (Line/Load reversible)
Terminal Torque	2.8 Nm (25 lb-in.)
Terminal Protection Degree	IP20
Vibration Resistance	3g (18-50Hz)

SHORT CIRCUIT WITHSTAND RATINGS FOR R-SERIES SUPPLEMENTARY PROTECTOR

Trip Curve	Amp Range	Backup Protection	
		UL-Listed Class J Fuse up to 10kA	No Backup Fuse Required up to:
All	0.5 - 6A	4xRC*	10kA
All	8 - 63A	4xRC*	5kA

*up to nearest rated current