O1D105

Photoelectric distance sensor

O1DLF3KG/IO-LINK

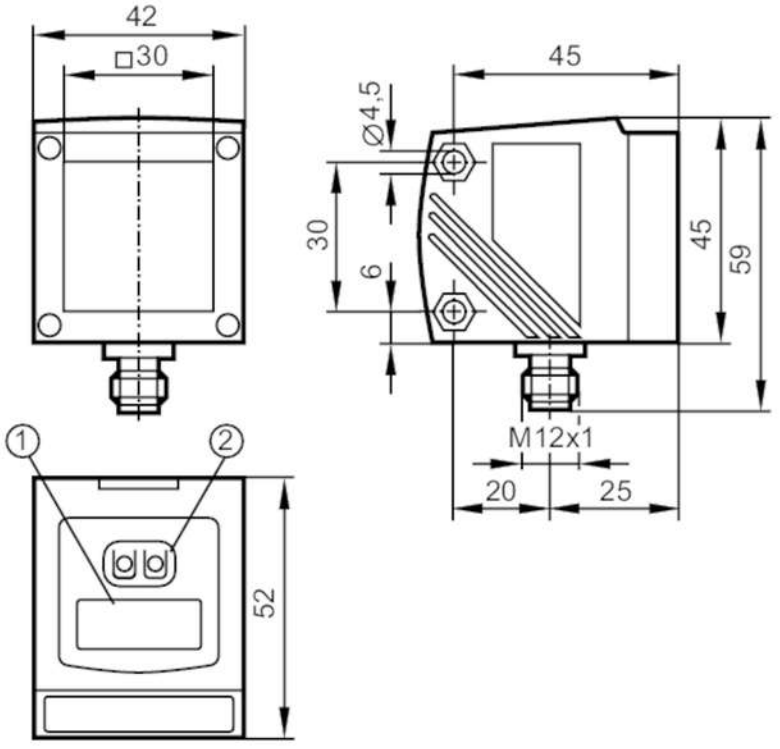

1 alphanumeric display 4-digit
2 programming buttons

Product characteristics		
Communication interface		IO-Link
Laser protection class		2
Housing		rectangular
Dimensions	[mm]	59 x 42 x 52
Electrical data		
Operating voltage	[V]	18...30 DC
Current consumption	[mA]	< 150
Protection class		III
Reverse polarity protection		yes
Typ. lifetime	[h]	50000
Inputs / outputs		
Number of inputs and outputs		Number of digital outputs: 2; Number of analogue outputs: 1

O1D105

Photoelectric distance sensor

O1DLF3KG/IO-LINK

Outputs		
Total number of outputs		2
Electrical design		PNP
Number of digital outputs		2
Output function		normally open / normally closed; (programmable)
Max. current load per output	[mA]	200
Number of analogue outputs		1
Analogue current output	[mA]	4...20; (scalable IEC 61131-2)
Max. load	[Ω]	250
Analogue voltage output	[V]	0...10; (scalable IEC 61131-2)
Min. load resistance	[Ω]	5000
Short-circuit protection		yes
Type of short-circuit protection		pulsed
Overload protection		yes
Detection zone		
Max. light spot width	[mm]	15
Max. light spot height	[mm]	15
Light spot dimensions refer to		10 m
Background suppression	[m]	10...100
Measuring/setting range		
Measuring range	[m]	0.2...10; (white paper 200 x 200 mm 90% remission)
Sampling rate	[Hz]	1...33
Interfaces		
Communication interface		IO-Link
Transmission type		COM2 (38,4 kBaud)
IO-Link revision		1.1
SDCI standard		IEC 61131-9
IO-Link device ID		806 d / 00 03 29h
Profiles		Smart Sensor: Device Identification; Device Diagnosis; Device Teach Channel; Binary Data Channel; Process Data Variable
SIO mode		yes
Required master port type		A
Process data analogue		2
Process data binary		2
Min. process cycle time	[ms]	6
Operating conditions		
Ambient temperature	[°C]	-10...60
Protection		IP 67

O1D105

Photoelectric distance sensor

O1DLF3KG/IO-LINK

Tests / approvals			
EMC		EN 60947-5-2	
Laser protection class		2	
Notes on laser protection		Caution:	laser light
		Power:	<= 4,0 mW
		Wave length:	650 nm
		pulse:	1,3 ns
		Do not stare into beam.	
		Avoid exposure to the laser light.	
		laser class:	2
			EN / IEC60825-1:2007
			EN / IEC60825-1:2014
			Complies with 21 CFR 1040 except for deviations pursuant to Laser Notice No. 50, dated June 2007.
MTTF	[years]	107	
Mechanical data			
Weight	[K40]	312	
Housing		rectangular	
Dimensions	[mm]	59 x 42 x 52	
Materials		housing: diecast zinc; front lens: glass; LED window: PC	
Lens alignment		side lens	
Displays / operating elements			
Display		switching status	2 x LED, yellow
		operation	LED, green
		distance value, programming	alphanumeric display, 4-digit
Accessories			
Accessories (optional)		Protective cover, E21133	
Remarks			
Remarks		operating voltage "supply class 2" according to cULus	
Pack quantity		1 pcs.	

Electrical connection

Connector: 1 x M12

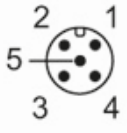

O1D105

Photoelectric distance sensor

O1DLF3KG/IO-LINK

Connection

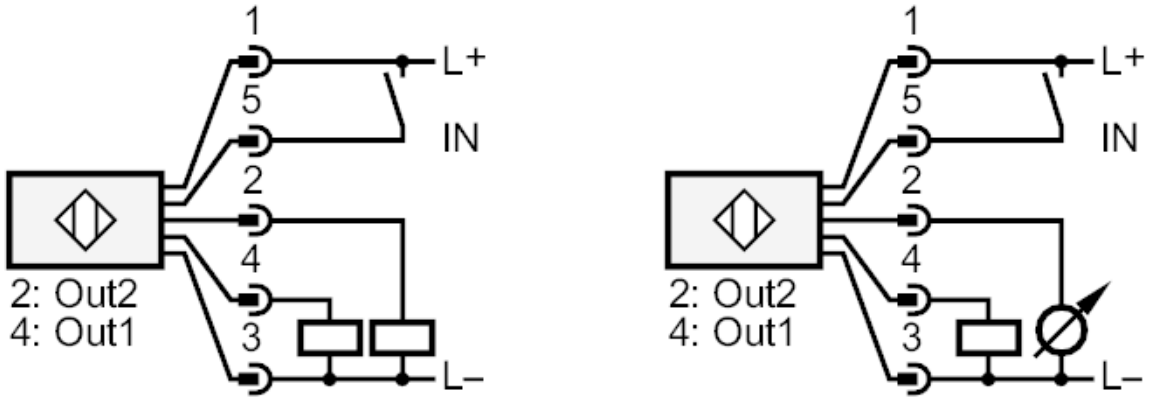

2:	switching output or analogue output 4...20 mA / 0...10 V
4:	switching output or IO-Link
5:	IN1 Laser On/ Off
	Core colours
BK	black
BN	brown
BU	blue
GY	grey
WH	white

O1D105

Photoelectric distance sensor

O1DLF3KG/IO-LINK

Other data		
Parameter	Setting range	Factory setting
Uni	mm, m, inch	mm
OU1	Hno, Hnc, Fno, Fnc	Hno
SP1	200...9999	1000
nSP1	200...9999	800
FSP1	200...9999	1200
OU2	Hno, Hnc, Fno, Fnc, I, U	I
SP2	200...9999	2000
nSP2	200...9999	1800
FSP2	200...9999	2200
ASP	0...9999	0
AEP	0...9999	9999
rATE [Hz]	1...33	15
dS1	0...0.1...5	0
dr1	0...0.1...5	0
dS2	0...0.1...5	0
dr2	0...0.1...5	0
dFo	0...0.1...5	0
dIS	d1...3; rd1...3; OFF	d3

repeatability/accuracy

	repeatability of the measured values		Accuracy	
	white (90 % remission)	grey (18 % remission)	white (90 % remission)	grey (18 % remission)
200...1000 mm	± 4.5 mm	± 6.0 mm	± 15.0 mm	± 16.0 mm
1000...2000 mm	± 5.0 mm	±8.0 mm	± 15.0 mm	± 18.0 mm
2000...4000 mm	± 16.0 mm	±19.0 mm	± 25.0 mm	± 30.0 mm
4000...6000 mm	± 24.0 mm	± 33.0 mm	± 35.0 mm	± 45.0 mm
6000...10000 mm	± 50.0 mm	-	± 65.0 mm	-

Sampling rate	15 Hz
Extraneous light on the object	< 40 klx

O1D105

Photoelectric distance sensor

O1DLF3KG/IO-LINK

repeatability/accuracy

	repeatability of the measured values		Accuracy	
	white (90 % remission)	grey (18 % remission)	white (90 % remission)	grey (18 % remission)
200...2000 mm	± 14.0 mm	± 14.0 mm	± 24.0 mm	± 24.0 mm
2000...4000 mm	± 25.0 mm	± 30.0 mm	± 35.0 mm	± 40 mm
4000...6000 mm	± 31.0 mm	±45.0 mm	± 41.0 mm	± 55.0 mm
6000...10000 mm	± 60.0 mm	-	± 70.0 mm	-

Sampling rate	15 Hz
Extraneous light on the object	< 40...100 klx
Range on black object (6 % remission)	<= 4000 klx
The values apply at	
constant ambient conditions	23 °C / 960 hPa
minimum power-on time in minutes	10