Bimetal thermometer, stainless steel version

Modelcode type: **A-R55**

Item number: **57333369**

Bimetal thermometer, stainless steel version	
Design	EN 13190
Model	R 5502, nominal size 100, location of stem radial
Accuracy class	class 1 per EN 13190
Scale range	0 °C ... 100 °C
Unit	°C
Connection design	standard, male thread
Process connection	1/2 NPT
Stem diameter	6 mm
Insertion length L1	100 mm
Materials	
Stem material	stainless steel
Movement	stainless steel
Dial	Aluminum, white
Pointer	aluminium, black
Case material	Stainless steel
Window	flat instrument glass
Operating conditions	

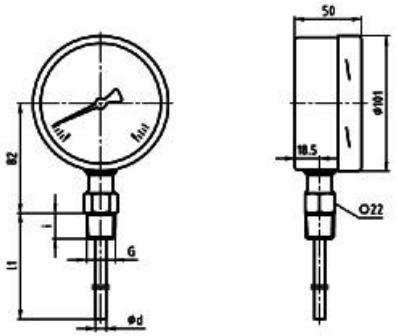

© Copyright by WIKA: Reproduction of this document is prohibited