E12714

Damping magnet

MAGNET M6.1 IATA E12538 5X

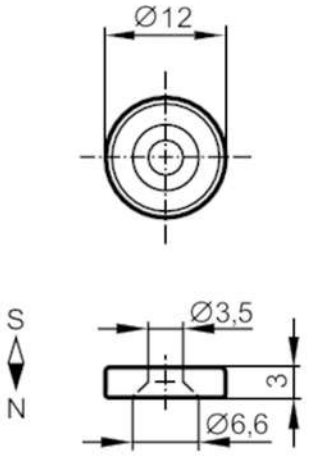

Operating conditions		
Ambient temperature	[°C]	-40...80
Mechanical data		
Weight	[g]	49.6
Dimensions	[mm]	Ø 12 / L = 3
Materials		neodymium
Magnetic field strength	[mT]	250
Remarks		
Pack quantity		5 pcs.