Datasheet - EX-AZ 16-12ZVRK-3D

Safety switch with separate actuator / EX-AZ 16



(Minor differences between the printed image and the original product may exist!)

- thermoplastic enclosure
- Double-insulated ⧈
- Multiple coding
- 52 mm x 90 mm x 30 mm
- Large wiring compartment
- High level of contact reliability with low voltages and currents
- Slotted holes for adjustment, circular holes for location
- Long life
- Ex certified

Including Ex-certified screwed cable gland and screw plug

- 3 cable entries M 16 x 1.5

Ordering details

Product type description	EX-AZ 16-12ZVRK-3D
Article number	1185377
EAN code	4030661324883

Approval

Approval	EX

Classification

Standards	EN ISO 13849-1
B_{10d} Opener (NC)	2.000.000
B_{10d} Normally open contact (NO)	1.000.000

- notice	at 10% I_e and ohmic load
Mission time	20 Years
notice	$MTTF_d = \frac{B_{10d}}{0,1 \times n_{op}}$ $n_{op} = \frac{d_{op} \times h_{op} \times 3600\ s/h}{t_{zyklus}}$

Global Properties

Product name	EX-AZ 16
Standards	Ex tD A22 IP67 T90° C X, EN 60947-5-1, EN 61241-1, BG-GS-ET-15
Compliance with the Directives (Y/N) CE	Yes
Materials	
- Material of the housings	Plastic, glass-fibre reinforced thermoplastic, self-extinguishing
- Material of the contacts	Silver
Housing coating	None
Weight	145 g

Mechanical data

Design of electrical connection	Screw connection
Cable cross-section of the cable glands	
- Min. Cable cross-section of the cable glands	Ø 6 mm
- Max. Cable cross-section of the cable glands	Ø 12 mm
Cable section	
- Min. Cable section	0,75 mm²
- Max. Cable section	2.5 mm²
Mechanical life	> 1 million operations
higher Latching force (Y/N)	Yes
Latching force	30 N
With ejection force (Y/N)	No
Positive break force	10 N
positive break travel	8 mm
Max. Actuating speed	1 m/s
notice	All indications about the cable section are including the conductor ferrules.

Ambient conditions

Ambient temperature	
- Min. environmental temperature	- 20°C
- Max. environmental temperature	+ 70°C
Protection class	IP67 to IEC/EN 60529

Electrical data

Design of control element	Normally open contact (NO), Opener (NC)
Switching principle	Creep circuit element
Number of auxiliary contacts	1 piece
Number of safety contacts	2 piece
Rated impulse withstand voltage U_{imp}	6 kV
Rated insulation voltage U_i	500 V
Thermal test current I_{the}	2.5 A
Utilisation category	AC-15: 230 V / 2,5 A, DC-13: 24 V / 2,5 A
Max. fuse rating	4 A gG D-fuse

ATEX

Explosion protection categories for gases	None
Explosion protection Zones for gases	None
Explosion protected category for dusts	ATEX dust ex-protection, Cat. 3
Explosion protection Zones for dusts	22

Dimensions

Dimensions of the sensor	
- Width of sensor	52 mm
- Height of sensor	90 mm
- Length of sensor	30 mm

notice

Individual coding available on request

Included in delivery

Actuators must be ordered separately.
Slot sealing plugs

Keywords

Keywords	Ex, EEx, ATEX, Ex AZ 16, Ex AZ16, AZ 16 Ex, AZ16 ex, AZ16ex, ATEX AZ16

Diagram

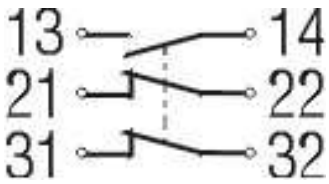

Note Diagram

positive break NC contact

active

no active

Normally-open contact

Normally-closed contact

Switch travel diagram

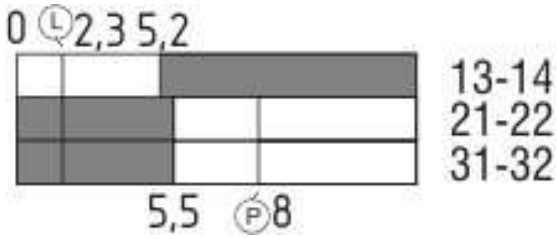

Notes Switch travel diagram

Contact closed

Contact open

Setting range

Break point

Positive opening sequence/- angle

VS adjustable range of NO contact
VÖ adjustable range of NC contact
N after travel

Ordering suffix

The applicable ordering suffix is added at the end of the part number of the safety switch.
Order example: EX-AZ 16-12ZVRK-3D**-2254**

...**-2254**	Latching force 5 N
...**- 1762** 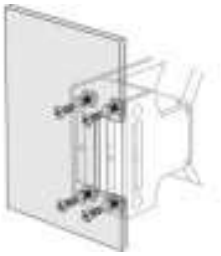	Versions with M5 nuts For front mounting of safety switch, e.g. on sheet-steel covers Cannot be retrofitted
...**-1637**	0,3 µm gold-plated contacts

Ordering code

EX-AZ 16-**(1)**ZV**(2)**K-**(3)**-3D

(1)

03	3 Opener (NC)
12	1 Normally open contact (NO) / 2 Opener (NC)

(2)

without	Ejection force
R	Latching force 30 N

(3)

2254	Latching force 5 N
1762	Front mounting
1637	gold-plated contacts

Documents

Operating instructions and Declaration of conformity (de) 493 kB, 01.03.2010
http://www.schmersal.net/Bilddata/Eex/Pdf/ex_az16/bedien/de/mrl_ex-az16_de.pdf

Operating instructions and Declaration of conformity (en) 506 kB, 01.03.2010
http://www.schmersal.net/Bilddata/Eex/Pdf/ex_az16/bedien/en/mrl_ex-az16_en.pdf

Images

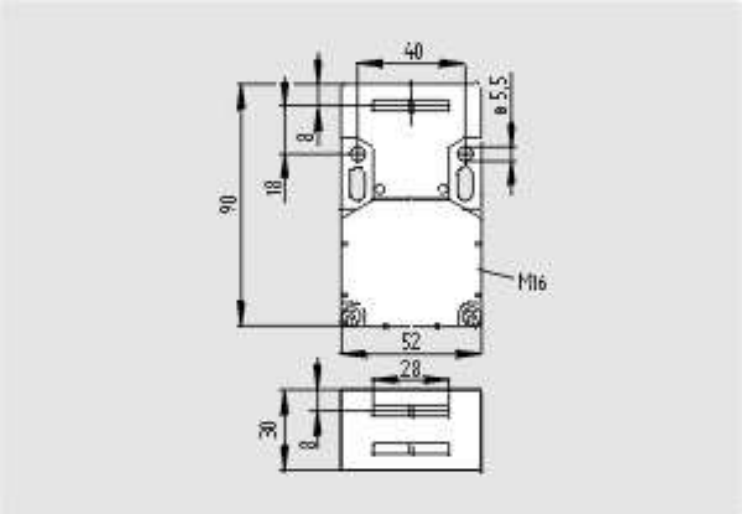

Dimensional drawing (basic component)

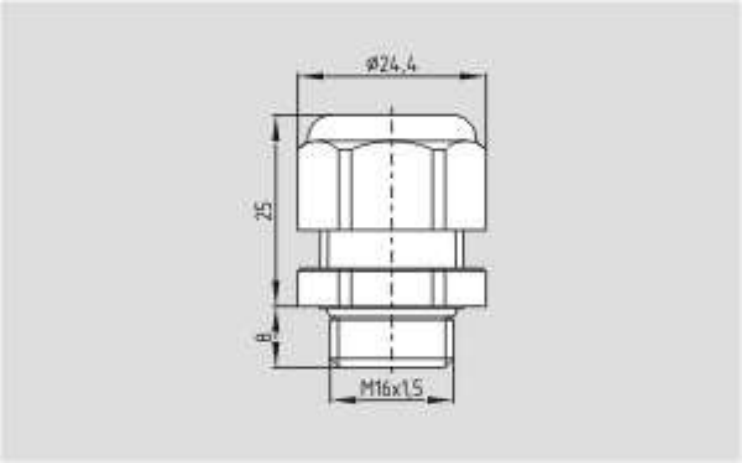

Dimensional drawing (miscellaneous)

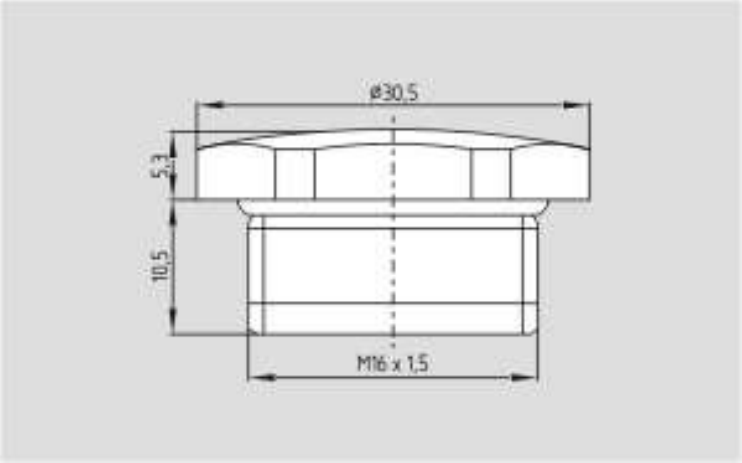

Dimensional drawing (miscellaneous)

System components

Actuator

1083036 - AZ 15/16-B1



1108278 - AZ 15/16-B1-2024 WITH SLOT SEALING PLUG



• For protection against the ingress of course dirt



1111081 - AZ 15/16-B1-2053 WITH BALL LATCH

• For interlocking of light to medium-weight guards



1126794 - AZ 15/16-B1-2177 WITH CENTERING GUIDE

• For interlocking of light, unguided guards



1137408 - AZ 15/16-B1-2245

• Damps vibration on guard device



1095558 - AZ 15/16-B2

• For very smal actuating radii in line with the plane of the actuator

---



1095550 - AZ 15/16-B3

• For very smal actuating radii at 90° to the plane of the actuator

---



1137434 - AZ 15/16-B6

• For very smal actuating radii in line with or at 90° to the plane of the actuator

---

Accessories

1149214 - Mounting set MS AZ 15/16 R/P

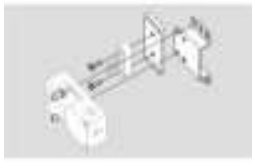

1150373 - Mounting set MS AZ 15/16 P

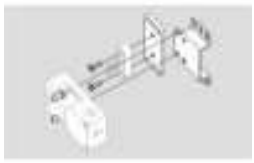

1089116 - Slot sealing plugs AZ 15/16-1476



- For protection against the ingress of course dirt
- To cover unused actuator slots
- Simple clip-in fitting

Mounting accessories

tamperproof screws



- To mount the actuator
- Higher protection against tampering with interlock
- Protects against unauthorised removal of actuator
- Various lengths available

K.A. Schmersal GmbH, Möddinghofe 30, D-42279 Wuppertal
The data and values have been checked throroughly. Technical modifications and errors excepted.
Generiert am 05.05.2010 - 12:17:55h Kasbase 1.3.5 DBI