DIN Rail Mounting Enclosures for Embedded Systems

(Manufactured by Italtronic SRl. Padova, Italy)

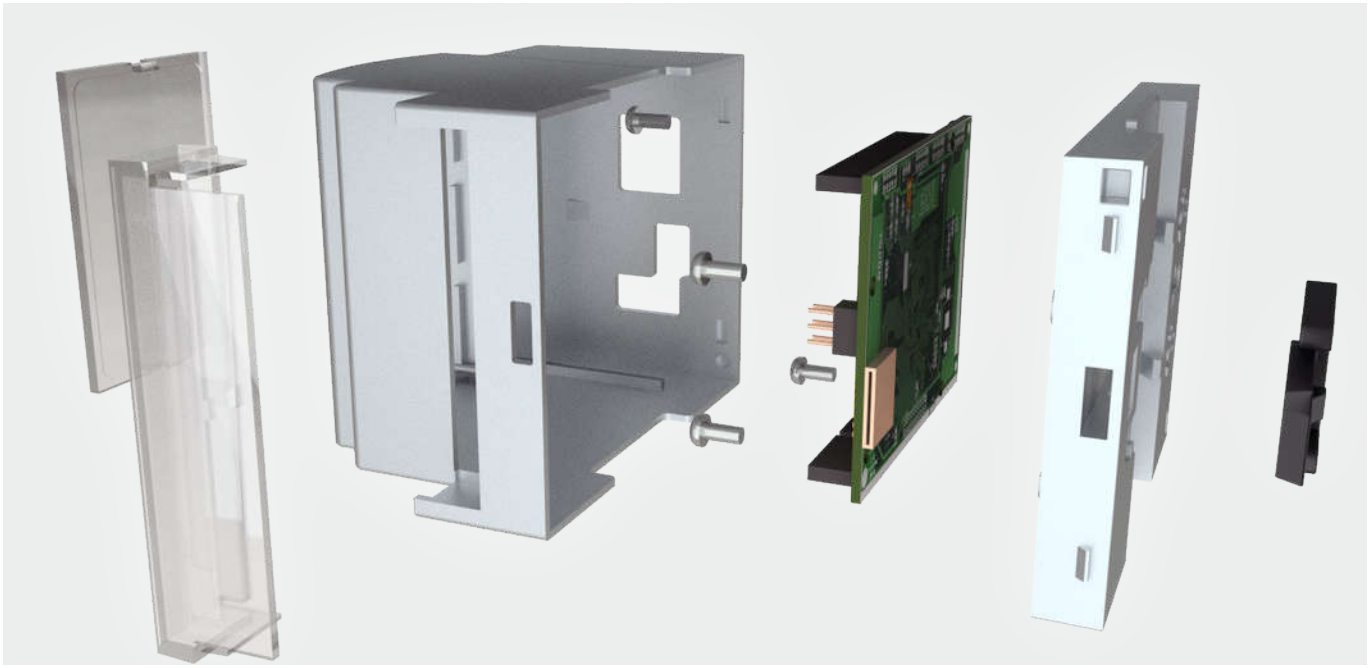

P/N - 25.0410000.YUN

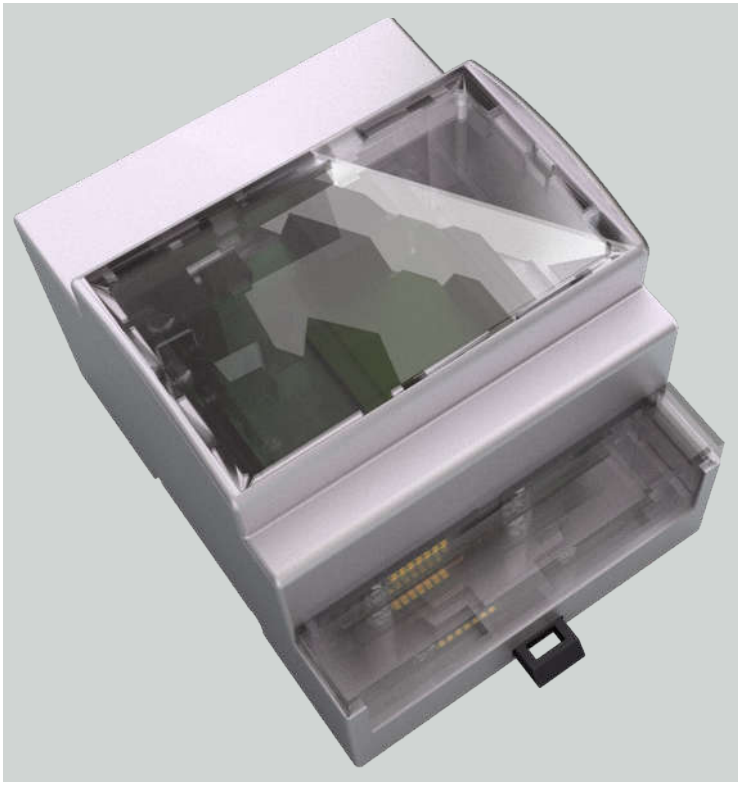

Hitaltech reserve the right to make changes without prior notice. Revision: 1 Date: 01/11/2013

Italtronic Srl. & Hitaltech

Italtronic Srl. based in Padova, Italy design and manufacture an innovative range of plastic enclosures to meet the needs of electronic and electrical applications across varying industries.

Hitaltech are pleased to be the apppointed technical sales, marketing and master distributor for the UK, Ireland and US Market.

Through our knowledge and experience of the product Hitaltech aim to offer design engineers an Italtronic product which can meet their technical requirements.

The **Modulbox** is a DIN (EN 60715) mounting enclosure which has been designed according to DIN 43880 to meet the needs of a number of applications including heating & lighting control and energy metering.

This DIN rail mounting enclosure has been modified specifically to house the embedded board ‘Ardunio Yun’.
The Modulbox is produced in UL94V-0 self extinguishing PPO and PC Material.

Many customisation options are available which aim to meet any design challenge, including machining and/or machining of the enclosure & accessories to meet customer specific demands.

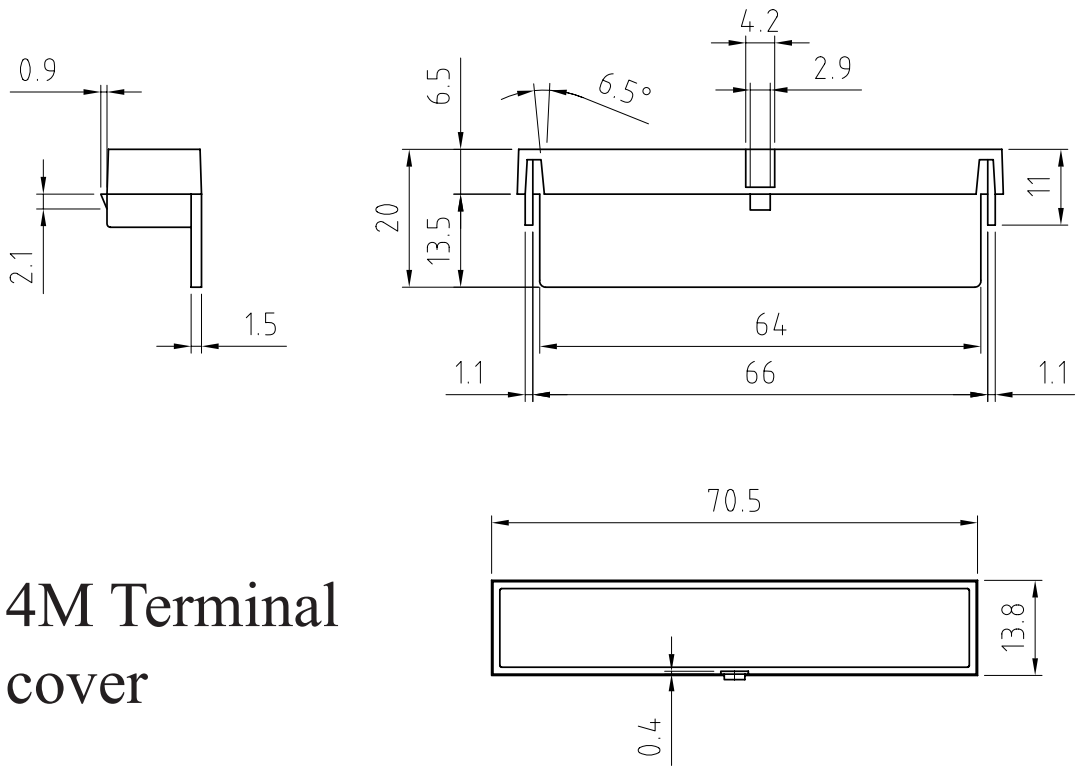

4M Terminal cover

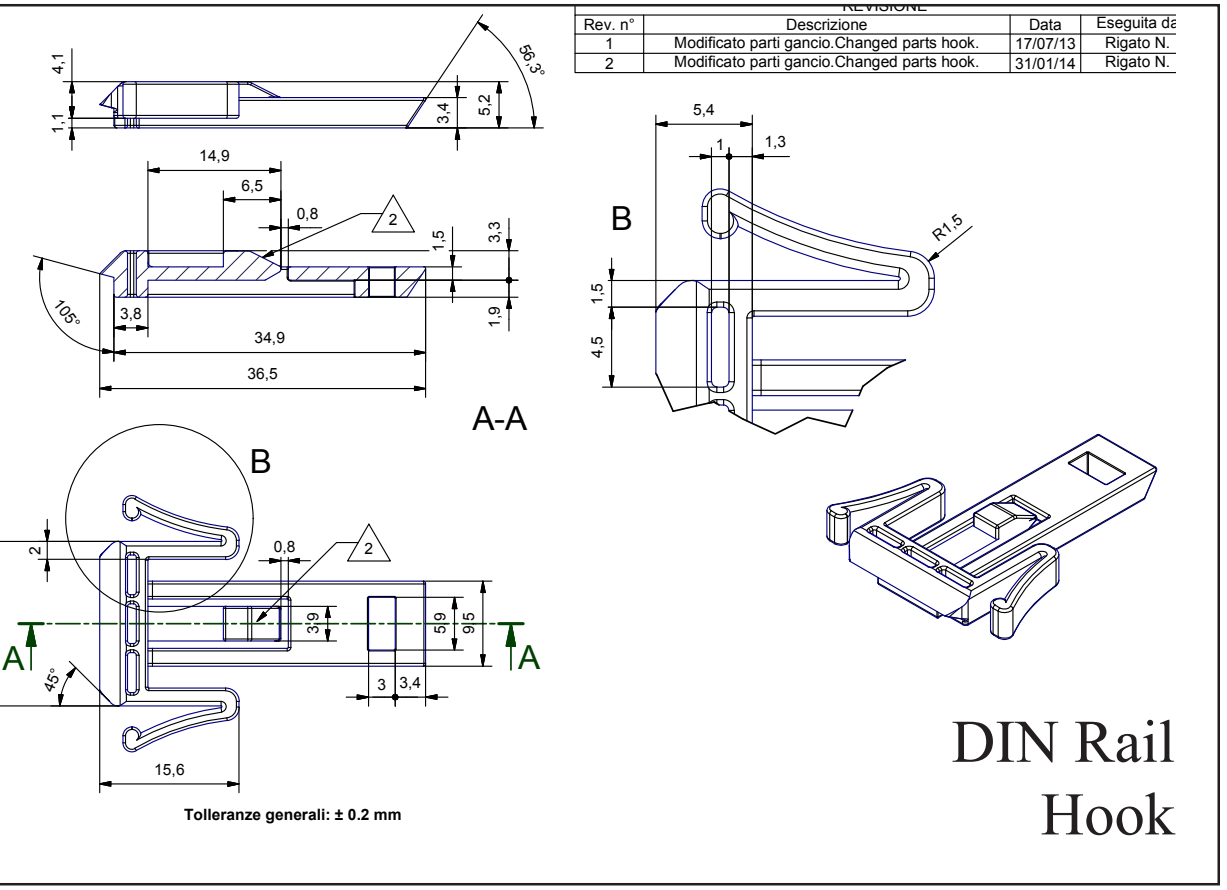

DIN Rail Hook

Hitaltech reserve the right to make changes without prior notice. Revision: 1 Date: 01/11/2013

4M Top panel

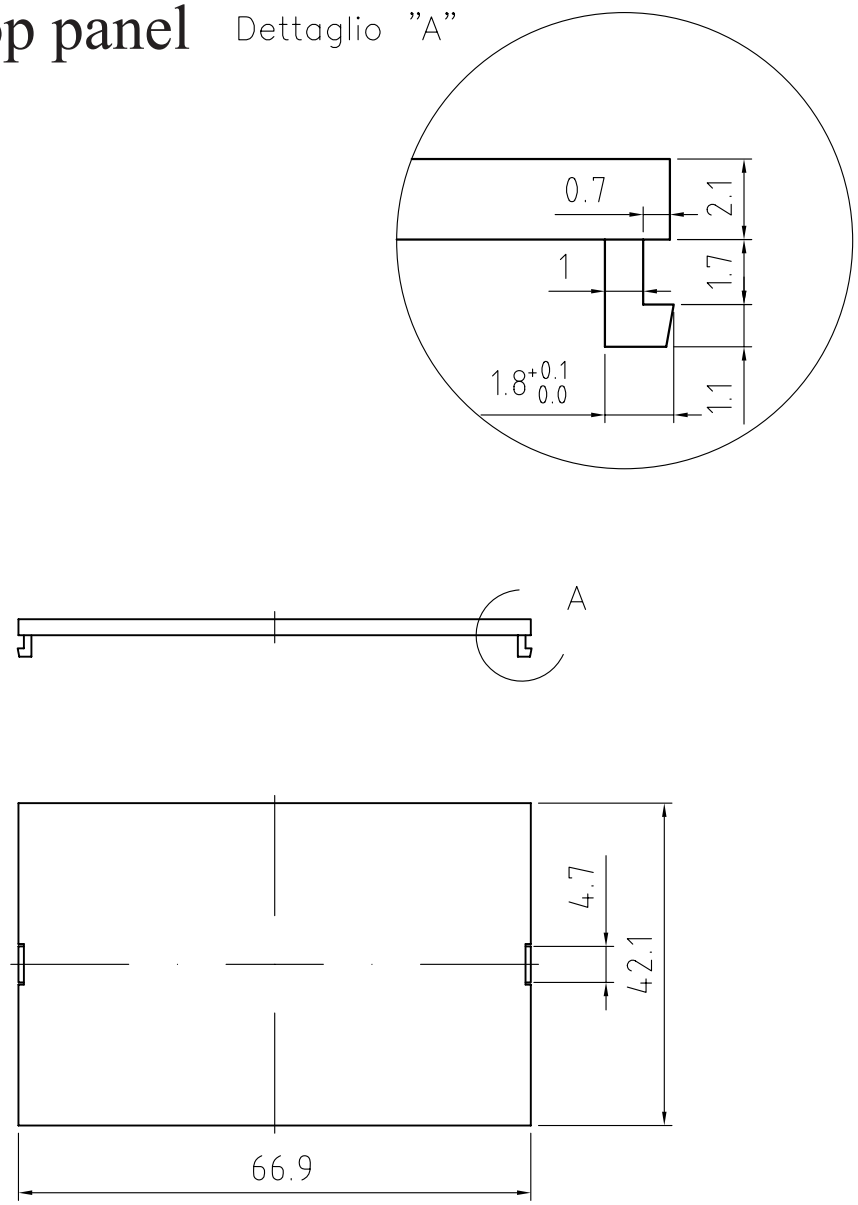

Tolleranza generale / General tollerance= ±0.2 mm

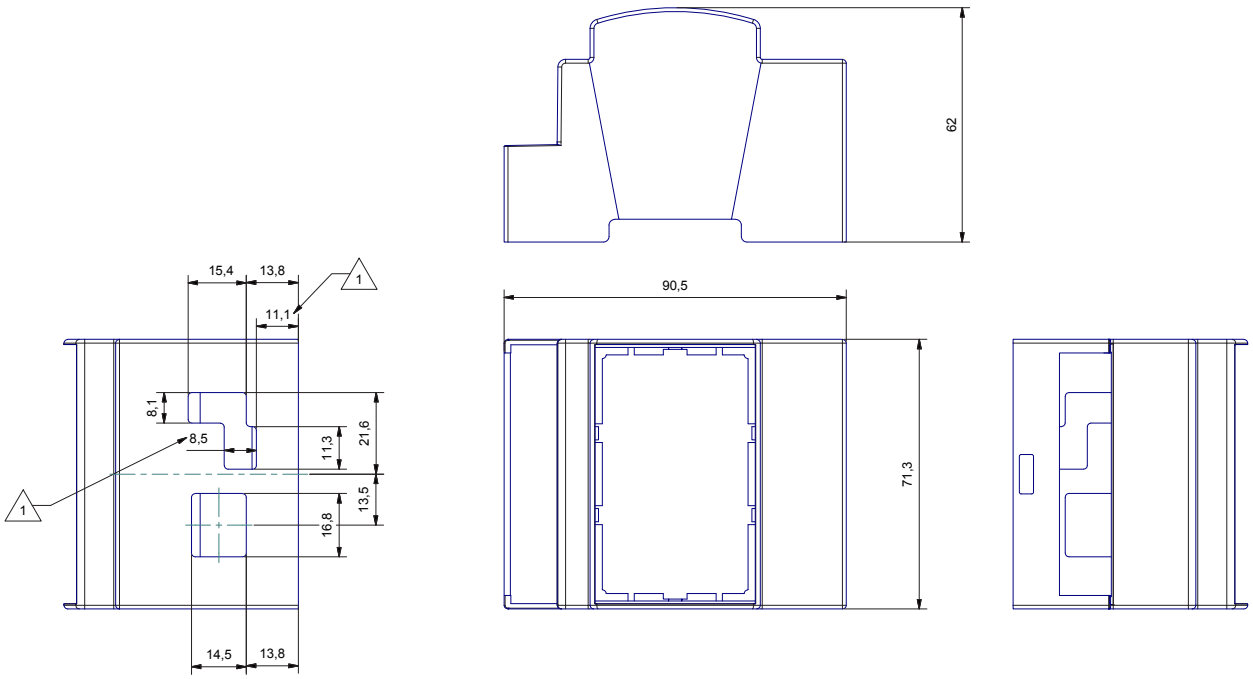

4M Body Enclosure - Arduino

Raggi non quotati R=1 mm

Hitaltech reserve the right to make changes without prior notice. Revision: 1 Date: 01/11/2013

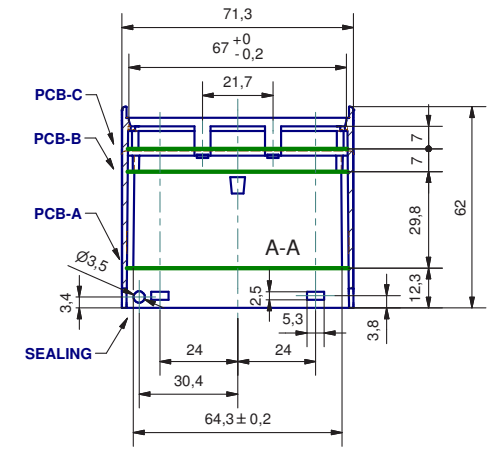

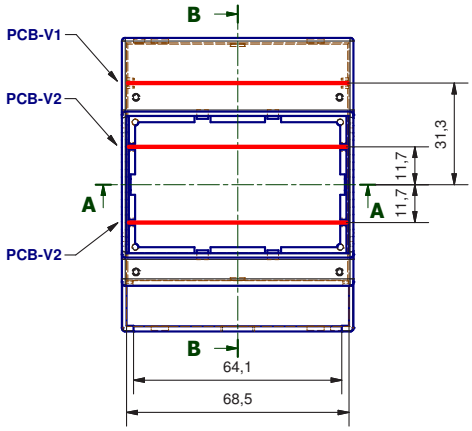

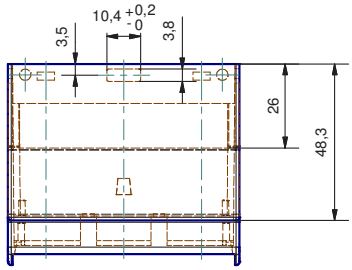

PCB TYPE	PCB DIMENSION	TOLERANCE
A	68,0 x 87,0	± 0,1 mm
B	67,6 x 72,6	± 0,1 mm
C	67,4 x 42,0	± 0,1 mm
V1	67,5 x 34,6	± 0,1 mm
V2	67,3 x 43,8	± 0,1 mm

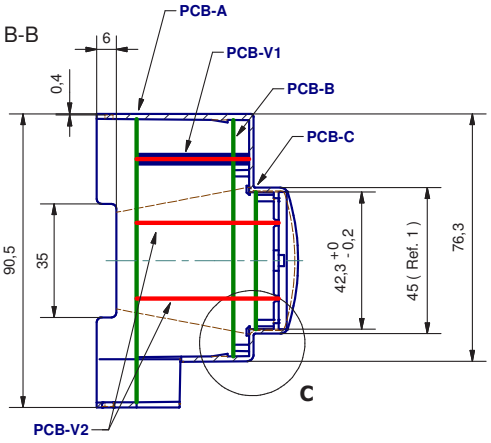

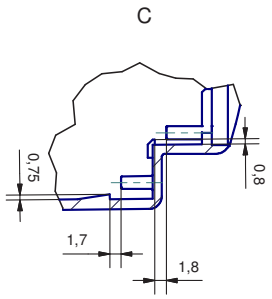

4M Enclosure for Arduino

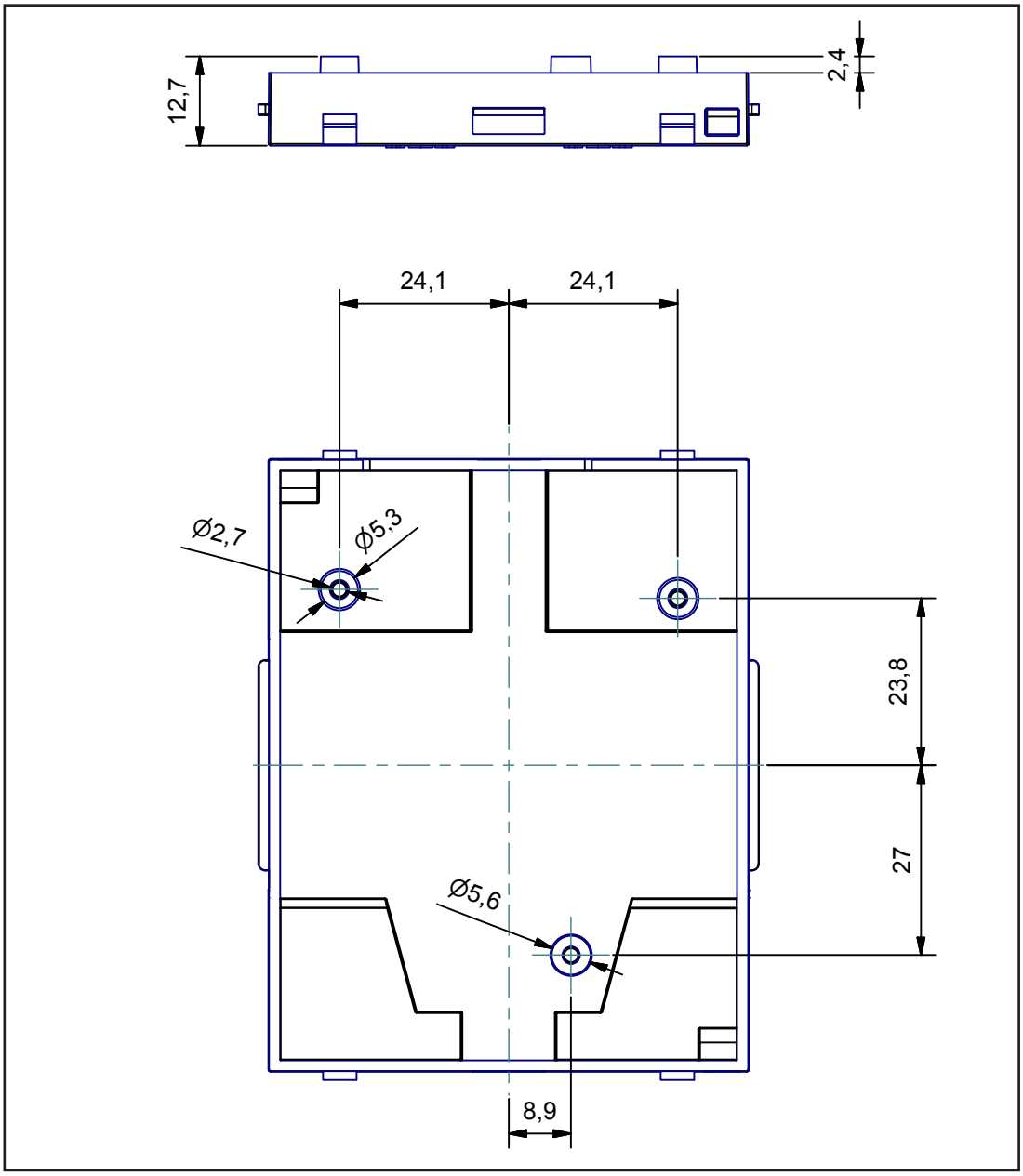

Hitaltech reserve the right to make changes without prior notice. Revision: 1 Date: 01/11/2013