OA5101

Through-beam sensor transmitter

OAS-OOKG

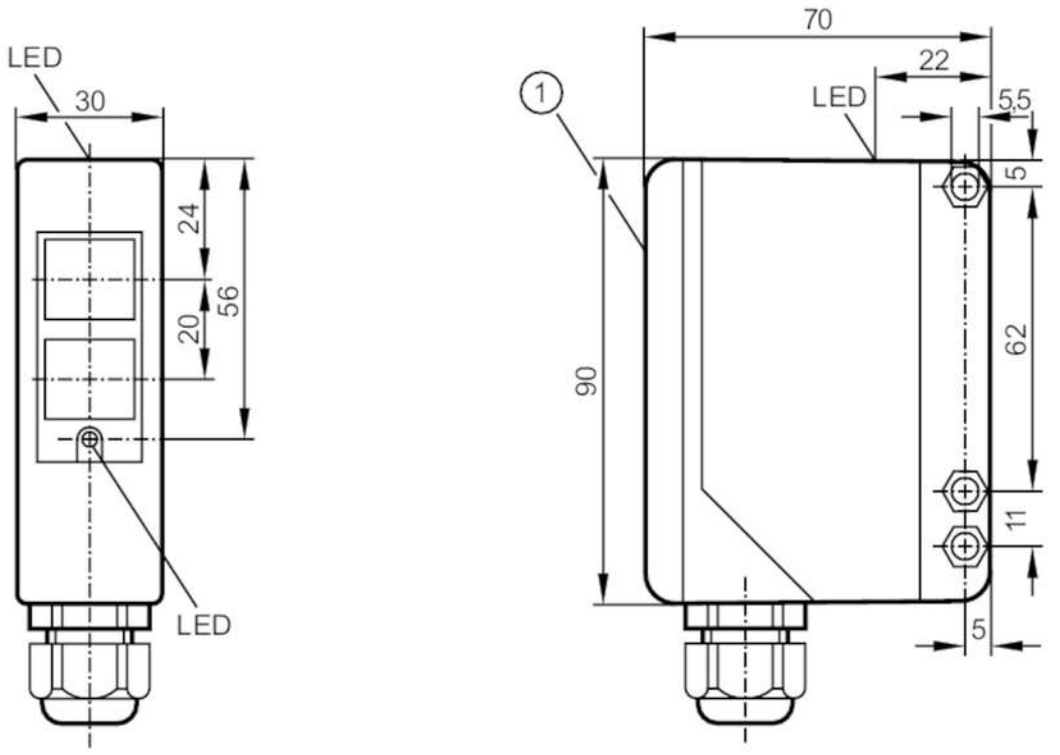

1 Cover
one transmitting diode each in upper and lower lens

Product characteristics		
Type of light		infrared light
Housing		rectangular
Application		
Function principle		Through-beam sensor
Electrical data		
Operating voltage	[V]	10...36 DC
Current consumption	[mA]	< 50
Protection class		II
Reverse polarity protection		yes
Type of light		infrared light
Wave length	[nm]	880
Outputs		
Short-circuit protection		yes
Type of short-circuit protection		pulsed
Overload protection		yes
Detection zone		
Transmitter / receiver		transmitter
Range	[m]	< 50

OA5101

Through-beam sensor transmitter

OAS-OOKG

Range adjustable		no	
Max. light spot diameter	[mm]	1500	
Light spot dimensions refer to		at maximum range	
Operating conditions			
Ambient temperature	[°C]	-25...60	
Protection		IP 65	
Tests / approvals			
EMC		EN 60947-5-2	
		EN 55011	class B
MTTF	[years]	1367	
Mechanical data			
Weight	[g]	274	
Housing		rectangular	
Dimensions	[mm]	90 x 30 x 70	
Materials		PPO modified	
Lens material		PMMA	
Lens alignment		side lens	
Displays / operating elements			
Display		operation	1 x LED, green
Accessories			
Items supplied		Angle bracket: 1, E20514	
		screwdrivers	
Remarks			
Pack quantity		1 pcs.	
Electrical connection			

terminals: ...1.5 mm²; Cable sheath: Ø 4.5...10 mm; Cable gland: M16 X 1.5

Connection

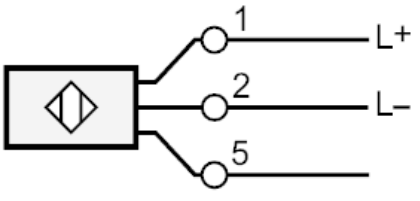

5	test