NOTES

MATERIAL:	(ABS) FLAME RETARDANT UL94 V0 (FILE # E56070) MATERIAL WITH BRASS INSERTS IN CORNER POSTS. (STYRENE) IS NON-FLAME RETARDANT WITHOUT BRASS INSERTS.
SCREWS:	(ABS) MACHINE SCREWS M3-0.5 x 10mm. REPLACEMENT PN 1591MS100 (100/BAG). (STYRENE) SELF TAPPING #4 x 0.5". REPLACEMENT PN 1599TS100BK (100/BAG).
COLORS:	** (ABS) BLACK, GRAY, BLUE, & BEIGE, (STYRENE) BLACK ONLY.
STANDARD OPTIONS:	SHIELDED, FLANGED BOTTOM, FLANGED LID

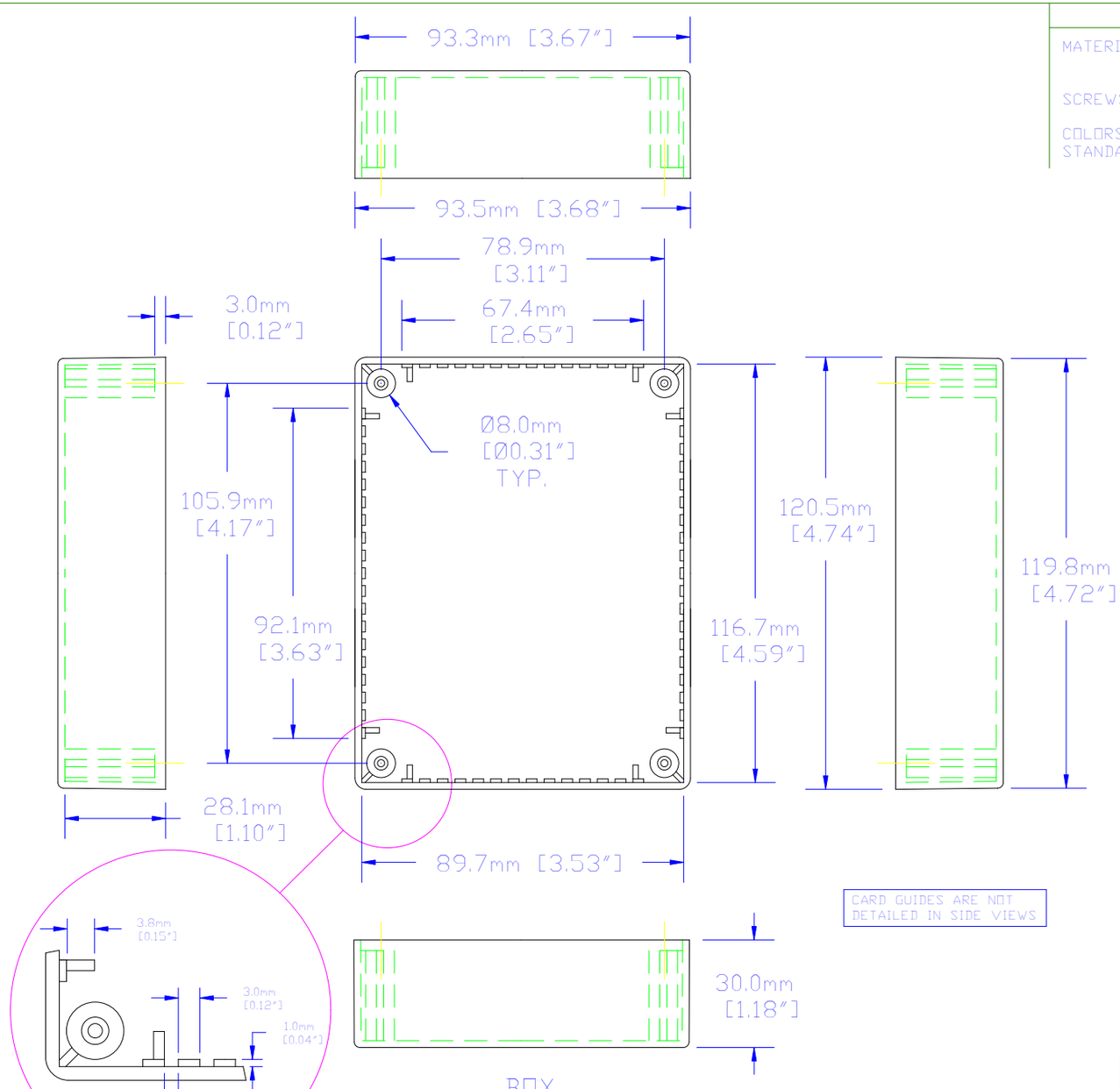

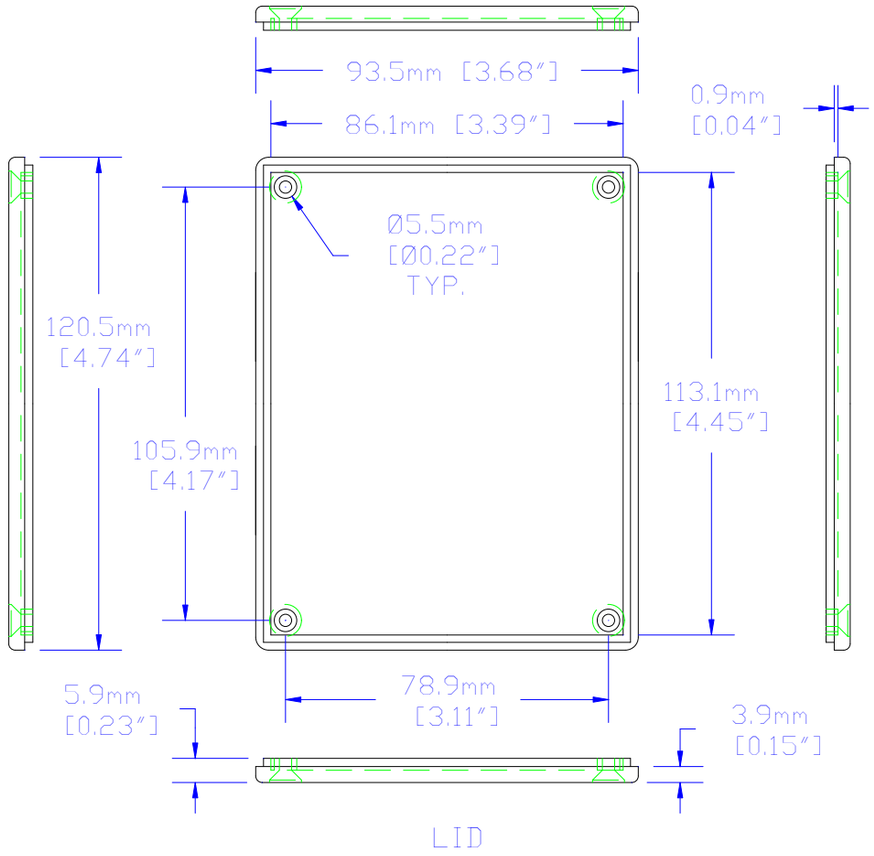

For the best fit print on legal size paper.

THIS DRAWING IS PROPRIETARY INFORMATION OF HAMMOND MFG.CO.LTD. NOT TO BE USED WITHOUT EXPRESSED WRITTEN PERMISSION OF HAMMOND MFG.CO.LTD.

Rev	ECN.	Description		Date	B
△	N/A	RELEASE	----	12/30/02	MJM

Unless otherwise spec'd dimensions are in millimeters
Tolerances are:
.X ±0.5
.XX ±0.25
.XXX ±0.130
Holes ±0.130
Angles ±.5°

Dwn	M. MERCER
Date	12/30/02
Chk	---
Mat'l	SEE NOTES
Sheet	1 o 1

HAMMOND MANUFACTURING CO. LTD.
Electronics Group, Waterloo, Ont. - Cheektowaga, NY

HAMMOND 1591 SERIES PLASTIC ENCLOSURE

Part#: 1591G**
Dwg: 1591G/A