

Function element, PKE / XTPE

Part no. **PKE-SWD-SP**

Article no. **150614**

Powering Business Worldwide

Delivery programme

Product range			SmartWire-DT slave
Subrange			SmartWire-DT PKE (motor protective circuit breaker)
Basic function			Motor protection Motor protection for heavy starting duty System protection
Product range			Accessories
Accessories			SmartWire-DT PKE (motor-protective circuit-breaker)
Function			For connecting the PKE motor-protective circuit-breaker with trip block to SmartWire-DT
Description			Fitted on PKE motor-protective circuit-breaker
Messages			Contactor state PKE Motor current in % Thermal motor image in % Trip indications (Overload, Short-circuit,...) Set value of overload releases Set time lag (CLASS) Part no. of trip block
Commands			Remote disconnection of motor-protective circuit-breaker
For use with			PKE12 PKE32 PKE65
Connection to SmartWire-DT			yes

Approvals

Product Standards	UL508; CSA-C22.2 No. 14; IEC60847-4-1; CE marking
UL File No.	E29184
UL CCN	NKCR
CSA File No.	165628
CSA Class No.	3211-07
NA Certification	UL listed, CSA certified
Specially designed for NA	No

General

Standards			IEC/EN 61131-2
Dimensions (W x H x D)		mm	45 x 46.8 x 70.3
Weight		kg	0.02
Mounting			at PKE12/32/65
Mounting position			as PKE 12/35/65

Ambient conditions, mechanical

Protection type (IEC/EN 60529, EN50178, VBG 4)			IP20
Vibrations (IEC/EN 61131-2:2008)			
Constant amplitude 3,5 mm		Hz	5 - 8.4
Constant acceleration 1 g		Hz	8.4 - 150
Mechanical shock resistance (IEC/EN 60068-2-27) semi-sinusoidal 15 g/11 ms		Impacts	9
Drop to IEC/EN 60068-2-31	Drop height	mm	50
Free fall, packaged (IEC/EN 60068-2-32)		m	0.3

Electromagnetic compatibility (EMC)

Overvoltage category			II
Pollution degree			2
Electrostatic discharge (IEC/EN 61131-2:2008)			
Air discharge (Level 3)		kV	8
Contact discharge (Level 2)		kV	4
Electromagnetic fields (IEC/EN 61131-2:2008)			
80 - 1000 MHz		V/m	10

1.4 - 2 GHz		V/m	3
2 - 2.7 GHz		V/m	1
Radio interference suppression SmartWire-DT			
Radio interference suppression			EN 55011 Class A
Burst (IEC/EN 61131-2:2008, Level 3)			
SmartWire-DT cables			
Signal lines		kV	1
CAN/DP-bus cable			
AS-Interface cables		kV	1
Radiated RFI (IEC/EN 61131-2:2008, Level 3)		V	10

Climatic environmental conditions

Operating ambient temperature (IEC 60068-2)		°C	
Ambient temperature		°C	-25 - +60
Condensation			Take appropriate measures to prevent condensation
Storage	ϑ	°C	-30 - +70
relative humidity, non-condensing (IEC/EN 60068-2-30)		%	5 - 95

SmartWire-DT network

Station type			SmartWire-DT slave
Address allocation			automatic
Status SmartWire-DT		LED	Green
Connections			Plug, 8-pole
Connection			External device plug SWD4-8SF2-5
Current consumption		mW	
15-V-SWD supply		mA	35

Dimensions

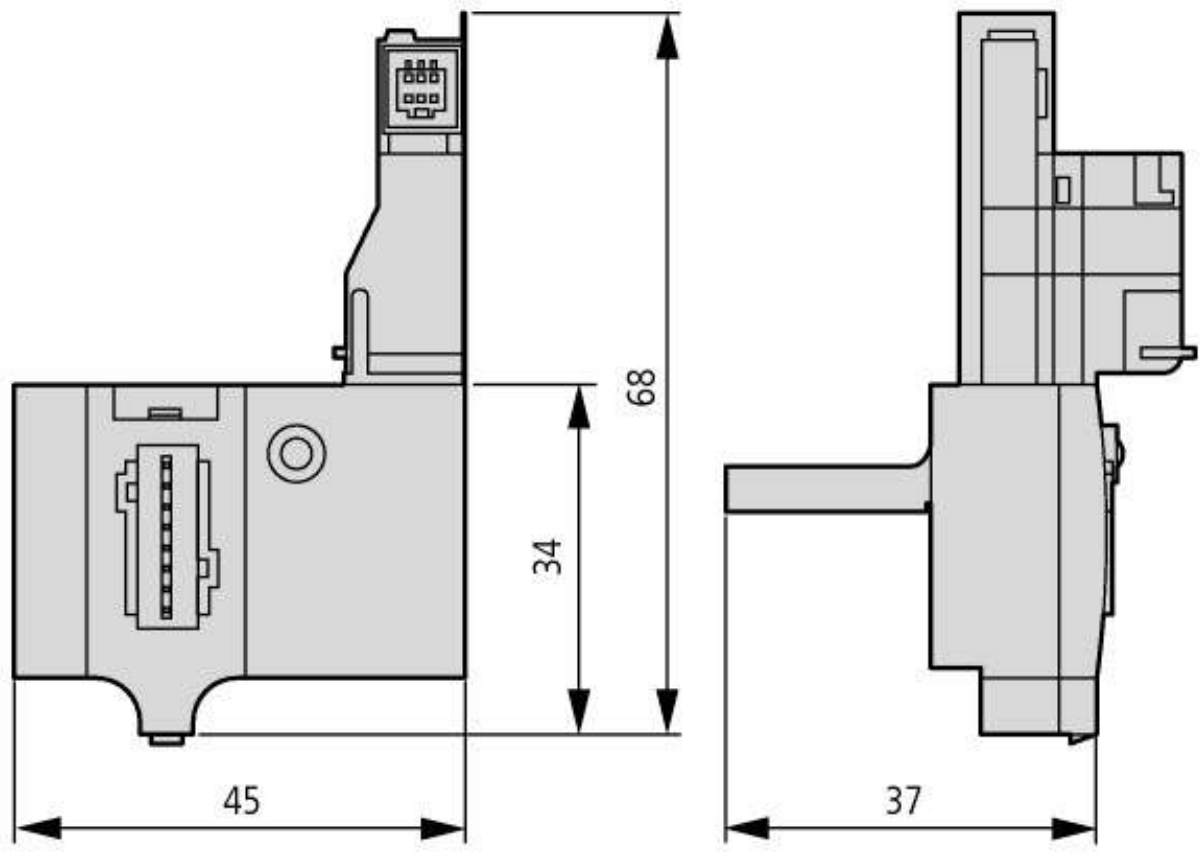

Additional product information (links)

IL03407192Z SWD communication extension for PKE12/32/65	
IL03407192Z SWD communication extension for PKE12/32/65	ftp://ftp.moeller.net/DOCUMENTATION/AWA_INSTRUCTIONS/IL03407192Z2012_02.pdf
MN05006001Z-EN(AWB2723-1613) SmartWire-DT, Unit	
MN05006001Z-DE (AWB2723-1613) SWD-Teilnehmer - Deutsch	ftp://ftp.moeller.net/DOCUMENTATION/AWB_MANUALS/MN05006001Z_DE.pdf

MN05006001Z-EN(AWB2723-1613) SmartWire-DT, Unit - English	ftp://ftp.moeller.net/DOCUMENTATION/AWB_MANUALS/MN05006001Z_EN.pdf
MN05006001Z-IT (AWB2723-1613) SmartWire-Darwin utenti - italiano	ftp://ftp.moeller.net/DOCUMENTATION/AWB_MANUALS/MN05006001Z_IT.pdf
Motor starters and "Special Purpose Ratings" for the North American market	http://www.moeller.net/binary/ver_techpapers/ver953en.pdf
Busbar Component Adapters for modern Industrial control panels	http://www.moeller.net/binary/ver_techpapers/ver960en.pdf

© 11/2012 by Eaton Industries GmbH