

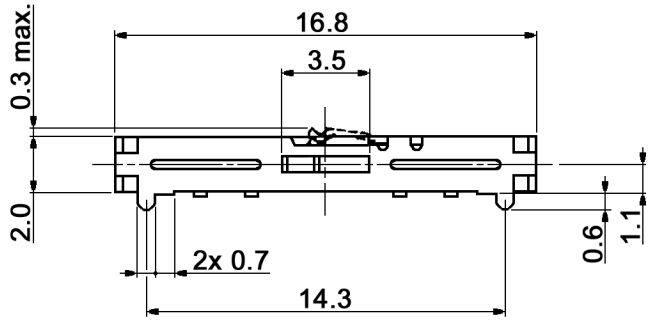

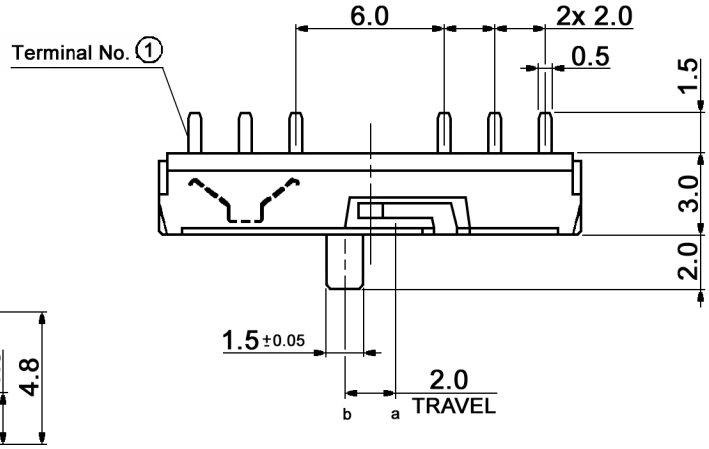

P.C. MOUNTING

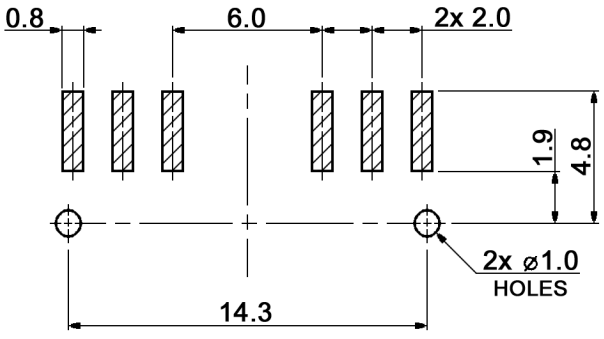

CIRCUIT DIAGRAM
C: COMMON PIN
BOTTOM VIEW

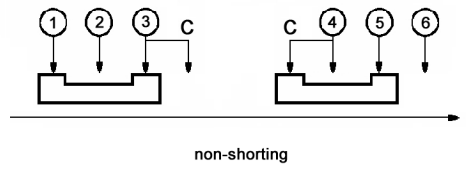

Specifications:

Contact rating:	6V DC; 0,5A
Contact resistance:	70mOhm max.
Insulation resistance:	100MOhm min. at 100V DC
Dielectric strength:	100V AC, 50Hz for the duration of 1 minute
Operating temperature:	-40°C to +85°C
Storage temperature:	-40°C to +85°C
Electrical life:	5 000 cycles
Operating force:	130gf +/- 80gf
Terminals:	PBS, silver plated
Soldering conditions:	75s > 225°C; max. 250°C
Materials:	Case: LCP
	Contact: BeCu, silver plated
	Slider: LCP
	Cover: SUS

Compliance: RohS II (2011/65/EU)

Tolerances: up to 10: ±0.2mm above 10-50: ±0.3mm			Date	Name	MMS 224	
			07/14	dr		
Specifications	06/15	dr	knitter-switch		30 31 61	Page 1/1
Modifications	Date	Name				