Safety Light Curtain
Orion1 Base



Approvals:

Application:

- Finger and hand detection
- When the light guard should be close to the hazardous zone
- When repeated access to the machine is necessary, manually serviced machines for example
- For area protection (horizontal mounting) and limitation of work zones

Features:

- Finger and hand detection
- 6 m and 19 m operating distances (finger and hand detection)
- Compact dimensions
- Local reset and EDM
- Type 4

The Orion1 Base light curtains are used for finger or hand detection, usually quite close to the dangerous machine.

Easy to use
- No more functions or settings than necessary.
- A local reset button can be connected directly to the light curtain: no need for cable between the reset button and the electrical cabinet or for an extra control module.
- Each light curtain can monitor the actuators without any extra control module (EDM function).

Faster installation
- Alignment help and a wide angle within the limits of a Type 4 device facilitate alignment.
- Rotation brackets simplify alignment too.
- M12 connectors speed up cabling.

Less downtime
- The alignment level being displayed, the alignment can be improved before the occurrence of the unwanted stop.
- Extensive error indication reduces troubleshooting time.
- Protective tubes and lens shields protect the devices in harsh environments.



Finger detection

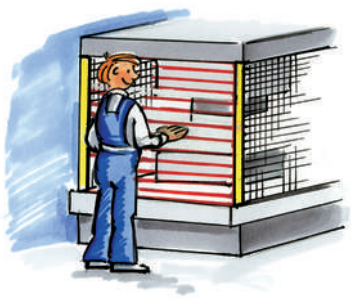

Hand detection

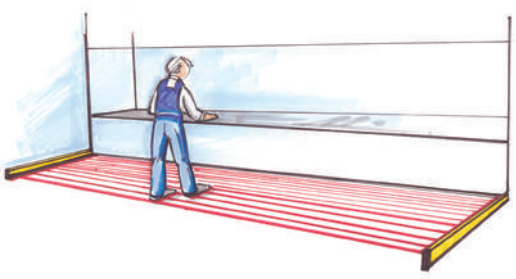

Area protection

Technical data

Functional Safety Data	
EN ISO 13849-1:2008	PL e, Cat 4
EN 61508-1..4:2010	SIL3; PFH_d = 2.64 x10^{-9}; HFT = 1; Mission time = 20 years
EN 62061:2005/A1:2013	SIL CL 3
Power supply	+24 VDC ± 20 %
Power consumption	
Transmitter	1.5 W max
Receiver	4 W max (without load)
Outputs	2 PNP
Short-circuit protection	1.4 A max
Output current	0.5 A max / output
Output voltage – ON	Vdd -1 V min
Output voltage – OFF	0.2 V max
Capacitive load	2.2 µF at +24 VDC max
Connectors	M12 - 4 pole male on transmitter (compatible with female M12-5 pole)
	M12 - 8 pole male on receiver
Cable length (for power supply)	50 m max
Light emission (λ)	Infrared, LED (950 nm)
Resolution	14 - 30 mm
Operating distance	0.2…19 m for 30 mm
	0.2…6 m for 14 mm
Ambient light rejection	According to IEC-61496-2:2013
Operating temperature	0…+ 55 °C
Storage temperature	- 25…+ 70 °C
Humidity range	15…95 % (no condensation)
Protection class	IP 65 (EN 60529:2000)
Weight	1.3 kg / meter for each single unit
Housing material	Painted aluminium (yellow RAL 1003)
Front glass material	PMMA
Cap material	PC MAKROLON
Connection Transmitter*	
Brown (1)	+24 VDC
White (2)	Test
Blue (3)	0 V
Black (4)	*Not used*
Grey (5)	*Not used*
Connection Receiver*	
White(1)	Reset/Acknowledge - Automatic Reset if not connected
Brown (2)	+24 VDC
Green (3)	EDM selection - Must be connected to +24 VDC to deactivate EDM
Yellow (4)	EDM
Grey (5)	OSSD1
Pink (6)	OSSD2
Blue (7)	0 V
Red (8)	Reset mode selection: manual or automatic reset

* Colors according to ABB Jokab Safety standard cables

Connection examples

Connection to a Pluto B20 Safety PLC

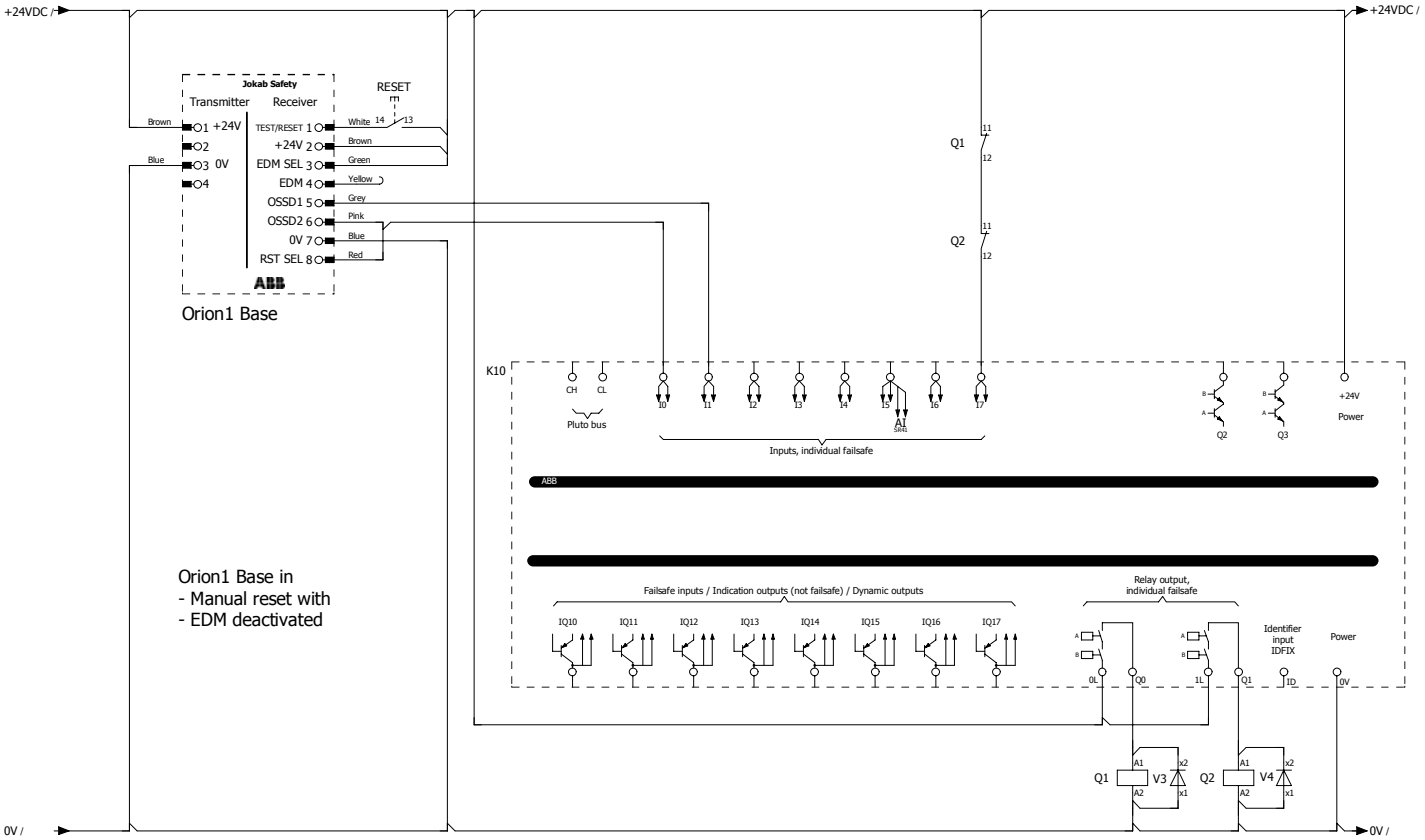

Connection to a RT9 safety relay

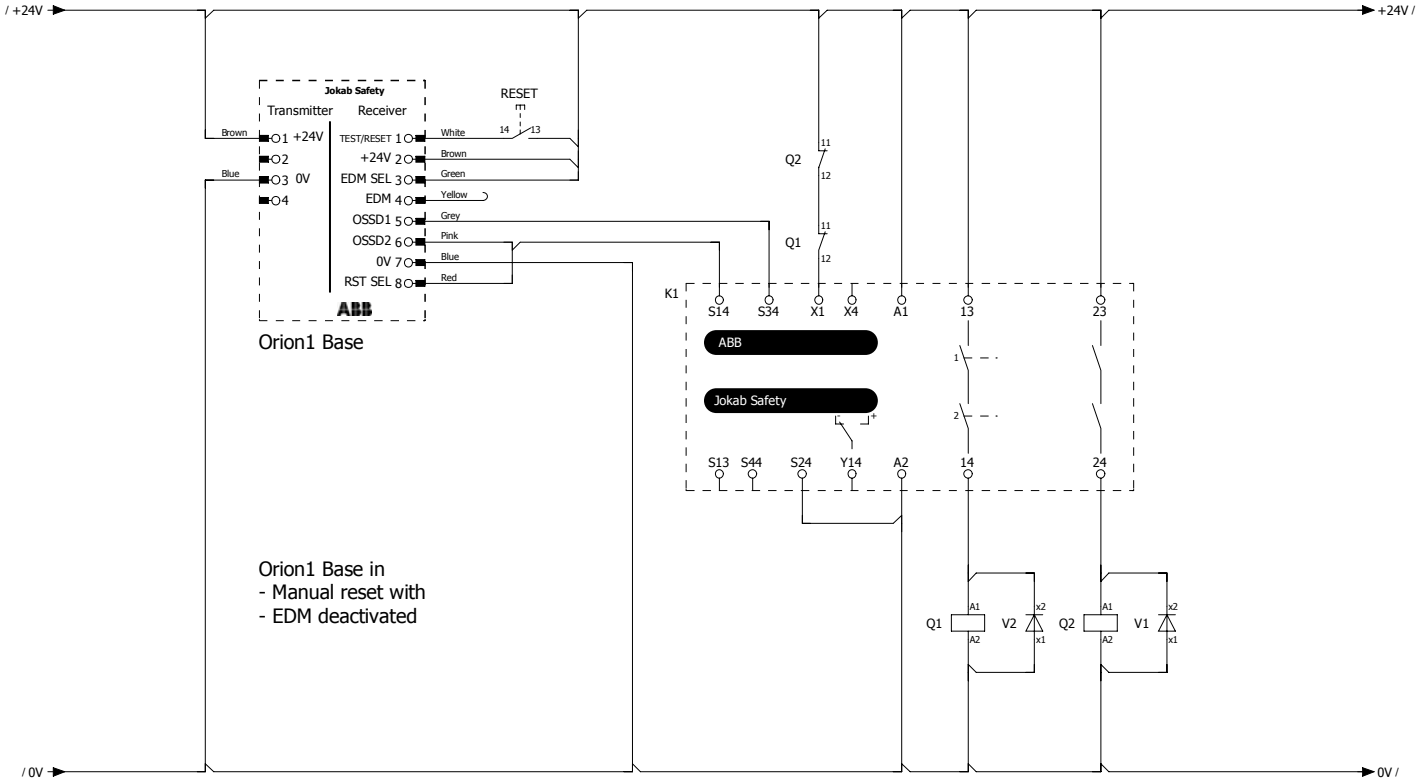

Models and ordering information

Orion1-4-14-015-B	2TLA022300R0000	Orion1 Base Transmitter + Receiver - R = 14 mm - H = 150 mm
Orion1-4-14-030-B	2TLA022300R0100	Orion1 Base Transmitter + Receiver - R = 14 mm - H = 300 mm
Orion1-4-14-045-B	2TLA022300R0200	Orion1 Base Transmitter + Receiver - R = 14 mm - H = 450 mm
Orion1-4-14-060-B	2TLA022300R0300	Orion1 Base Transmitter + Receiver - R = 14 mm - H = 600 mm
Orion1-4-14-075-B	2TLA022300R0400	Orion1 Base Transmitter + Receiver - R = 14 mm - H = 750 mm
Orion1-4-14-090-B	2TLA022300R0500	Orion1 Base Transmitter + Receiver - R = 14 mm - H = 900 mm
Orion1-4-14-105-B	2TLA022300R0600	Orion1 Base Transmitter + Receiver - R = 14 mm - H = 1050 mm
Orion1-4-14-120-B	2TLA022300R0700	Orion1 Base Transmitter + Receiver - R = 14 mm - H = 1200 mm
Orion1-4-14-135-B	2TLA022300R0800	Orion1 Base Transmitter + Receiver - R = 14 mm - H = 1350 mm
Orion1-4-14-150-B	2TLA022300R0900	Orion1 Base Transmitter + Receiver - R = 14 mm - H = 1500 mm
Orion1-4-14-165-B	2TLA022300R1000	Orion1 Base Transmitter + Receiver - R = 14 mm - H = 1650 mm
Orion1-4-14-180-B	2TLA022300R1100	Orion1 Base Transmitter + Receiver - R = 14 mm - H = 1800 mm
Orion1-4-30-015-B	2TLA022302R0000	Orion1 Base Transmitter + Receiver - R = 30 mm - H = 150 mm
Orion1-4-30-030-B	2TLA022302R0100	Orion1 Base Transmitter + Receiver - R = 30 mm - H = 300 mm
Orion1-4-30-045-B	2TLA022302R0200	Orion1 Base Transmitter + Receiver - R = 30 mm - H = 450 mm
Orion1-4-30-060-B	2TLA022302R0300	Orion1 Base Transmitter + Receiver - R = 30 mm - H = 600 mm
Orion1-4-30-075-B	2TLA022302R0400	Orion1 Base Transmitter + Receiver - R = 30 mm - H = 750 mm
Orion1-4-30-090-B	2TLA022302R0500	Orion1 Base Transmitter + Receiver - R = 30 mm - H = 900 mm
Orion1-4-30-105-B	2TLA022302R0600	Orion1 Base Transmitter + Receiver - R = 30 mm - H = 1050 mm
Orion1-4-30-120-B	2TLA022302R0700	Orion1 Base Transmitter + Receiver - R = 30 mm - H = 1200 mm
Orion1-4-30-135-B	2TLA022302R0800	Orion1 Base Transmitter + Receiver - R = 30 mm - H = 1350 mm
Orion1-4-30-150-B	2TLA022302R0900	Orion1 Base Transmitter + Receiver - R = 30 mm - H = 1500 mm
Orion1-4-30-165-B	2TLA022302R1000	Orion1 Base Transmitter + Receiver - R = 30 mm - H = 1650 mm
Orion1-4-30-180-B	2TLA022302R1100	Orion1 Base Transmitter + Receiver - R = 30 mm - H = 1800 mm

Cables

M12-C61	2TLA020056R0000	Straight M12-5 female connector with 6 m shielded cable
M12-C101	2TLA020056R1000	Straight M12-5 female connector with 10 m shielded cable
M12-C201	2TLA020056R1400	Straight M12-5 female connector with 20 m shielded cable
M12-C63	2TLA020056R3000	Straight M12-8 female connector with 6 m shielded cable
M12-C103	2TLA020056R4000	Straight M12-8 female connector with 10 m shielded cable
M12-C203	2TLA020056R4100	Straight M12-8 female connector with 20 m shielded cable

Spare parts (delivered with products originally)

JSM Orion01	2TLA022310R0000	4 standard brackets for Orion1 & Orion2

Accessories

Orion TP-14	2TLA022310R5200	Orion Test Piece 14 mm
Orion TP-30	2TLA022310R5300	Orion Test Piece 30 mm
Orion Laser	2TLA022310R5000	Orion Laser pointer
JSM Orion03	2TLA022310R0100	4 rotation brackets for Orion1 Base
JSM Orion06	2TLA022310R0400	Kit for mounting of Orion1 & Orion2 in Stand (4 pieces)
JSM Orion07	2TLA022310R0500	Kit for mounting of Orion1 & Orion2 in Stand (6 pieces)
JSM Orion11	2TLA022310R0900	Kit for mounting of Orion1 Mirror in Stand
Orion Stand Plate	2TLA022312R5000	Orion Plate kit for adjustment of protective stand
Orion1 Mirror*		Deviating mirror to be mounted in Orion Stand with 1 kit JSM Orion11
Orion Stand*		Protective stand
Orion WET*		Protective tube
Orion Shield*		Lens shield

* These accessories are available in different sizes. More information on www.abb.com/jokabsafety

Dimensions

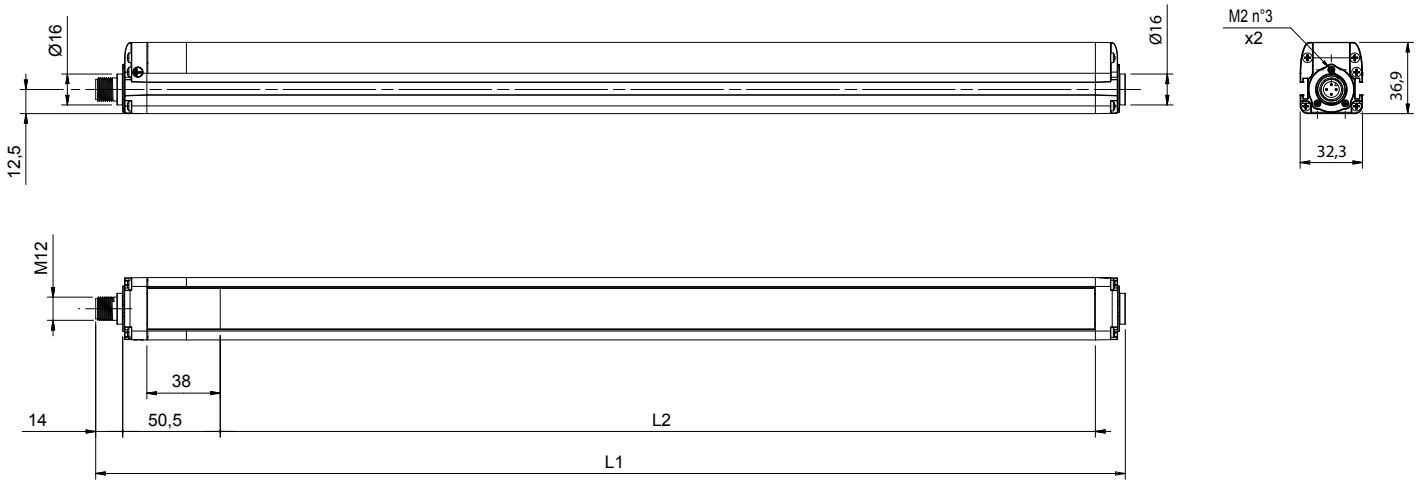

All dimensions in millimeters

Model	Protected height (mm)	L1 (mm)	L2 (mm)
Orion1-4-xx-015-B	150	233,30	153,30
Orion1-4-xx-030-B	300	383,20	303,20
Orion1-4-xx-045-B	450	533,20	453,30
Orion1-4-xx-060-B	600	683,30	603,20
Orion1-4-xx-075-B	750	833,20	753,30
Orion1-4-xx-090-B	900	983,20	903,20
Orion1-4-xx-105-B	1050	1133,20	1053,20
Orion1-4-xx-120-B	1200	1283,20	1203,30
Orion1-4-xx-135-B	1350	1433,20	1353,20
Orion1-4-xx-150-B	1500	1583,30	1503,30
Orion1-4-xx-165-B	1650	1733,30	1653,30
Orion1-4-xx-180-B	1800	1883,30	1803,30

xx = Resolution

Contact us

ABB AB
Jokab Safety
Varlabergsvägen 11
SE-434 39 Kungsbacka
Tel. +46 (0) 21-32 50 00

www.abb.com/jokabsafety

Note
We reserve the right to make technical changes or modify the contents of this document without prior notice. With regard to purchase orders, the agreed particulars shall prevail. ABB does not accept any responsibility whatsoever for potential errors or possible lack of information in this document.

We reserve all rights in this document and in the subject matter and illustrations contained therein. Any reproduction, disclosure to third parties or utilization of its contents - in whole or in parts – is forbidden without prior written consent of ABB.

Copyright© 2015 ABB
All rights reserved

2TLC172052L0201

Power and productivity
for a better world™