# E12776

## Wirable plug

SSTGB050ZDSFKPG

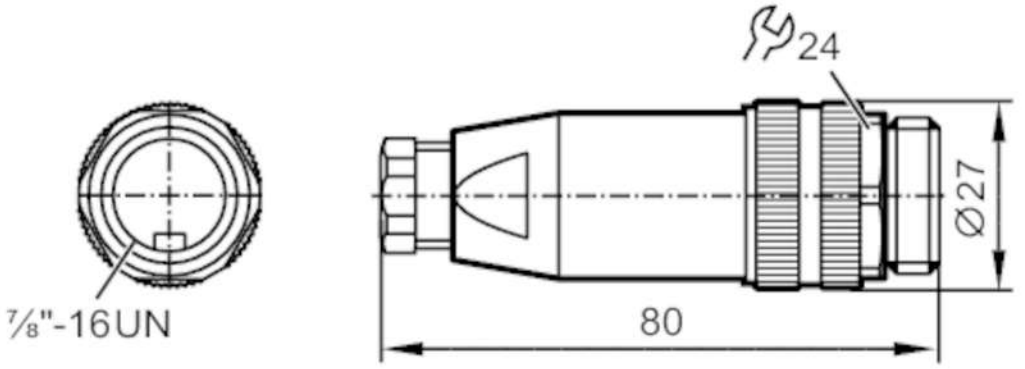


| | | |
|---|---|---|
| **Application** | | |
| Special feature | | Gold-plated contacts |
| **Electrical data** | | |
| Operating voltage | [V] | < 300 AC/DC |
| Protection class | | II |
| Max. current load total | [A] | 9 |
| **Operating conditions** | | |
| Ambient temperature | [°C] | -25...85 |
| Protection | | IP 67 |
| **Mechanical data** | | |
| Weight | [g] | 54.7 |
| Moulded-body material | | PBT |
| Material nut | | diecast zinc, nickel-plated |
| **Remarks** | | |
| Remarks | | Pin 4 leading |
| Pack quantity | | 1 pcs. |

# E12776

## Wirable plug

SSTGB050ZDSFKPG

### Electrical connection

screw terminals: ...1.5 mm²; Cable sheath: Ø 6...8 mm; AWG 16

### Electrical connection - plug

Connector: 1 x 7/8", straight; Moulded body: PBT; Locking: diecast zinc, nickel-plated; Contacts: gold-plated




### Connection

