14576-023 PROPACPRO DESKTOP CASE, UNSHIELDED, 2 U, 42 HP, 326 MM



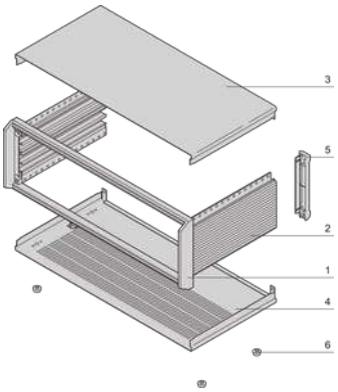

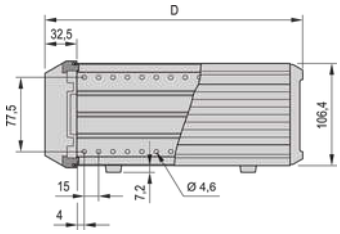

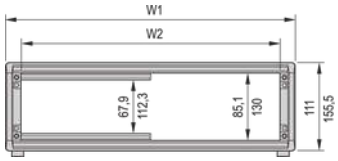

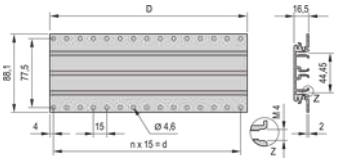



KEY FEATURES

- Desktop case for individual assembly
- Ventilation slots in base plate
- Retrofitable EMC shielding
- Prepared for GND/earthing
- Conforms with DIN EN 62368-1

PRODUCT ATTRIBUTES

- Product Type: Case
- Product Family: PropacPRO
- Type: Case for Individual Electronic Components
- Rack Height: 2 U
- Height: 111 mm
- Usable Height: 85.1 mm
- Rack Width: 42 HP
- Width: 257 mm

Usable Width: 219 mm

Depth: 326 mm

EMC Shielding: No (Retrofittable)

Static Load: 25 kg

Protection Rating: IP20

Front Frame Construction: Single Piece

Cooling Option: No

Complies With: IEC 60297-3-101

Package Quantity: 1

ADDITIONAL PRODUCT DETAILS

The nVent SCHROFF PropacPRO case provides electronics protection for 19" and individual electronic assemblies. The aluminum die cast frames and profile sidepanels guarantee a robust solution. In addition an extensive accessory range is available.

Case, 2 U with side panel for tip-up carrying handle on request.

CERTIFICATIONS

RoHS COMPLIANT

DIN

North America
All locations
+1.763.422.2661
Chat with us:
schroff.nvent.com

Europe
Straubenhardt, Germany
+49.7082.794.0
Betschdorf, France
+33.3.88.90.64.90
Warsaw, Poland
+48.22.209.98.35
Assago, Italy
+39.02.932.7141
Chat with us:
schroff.nvent.com

Asia
Shanghai, China
+86.21.2412.6943
Qingdao, China
+86.532.8771.6101
Singapore
+65.6768.5800
Shin-Yokohama, Japan
+81.45.476.0271
Chat with us:
schroff.nvent.com

Middle East & India
Dubai, United Arab Emirates
+971.4.378.1700
Bangalore, India
+91.80.6715.2001
Istanbul, Turkey
+90.216.250.7374
Chat with us:
schroff.nvent.com

nVent

Our powerful portfolio of brands:
nVent.com **CADDY ERICO HOFFMAN RAYCHEM SCHROFF TRACER**

© 2023 nVent. All nVent marks and logos are owned or licensed by nVent Services GmbH or its affiliates. All other trademarks are the property of their respective owners.

nVent reserves the right to change specifications without notice.