M12 male 0° A-cod. with cable

PVC 5x0.34 bk UL/CSA 2m

Male straight
A-coded
M12, 5-pole
Art-No. 7005 - M12 Lite - (plastic hexagonal screw) on request
Further cable lengths on request.
The resistance to aggressive media should be individually tested for your application. Further details on request.
Plastic housings with good resistance against chemicals and oils.

Link to Product

Illustration

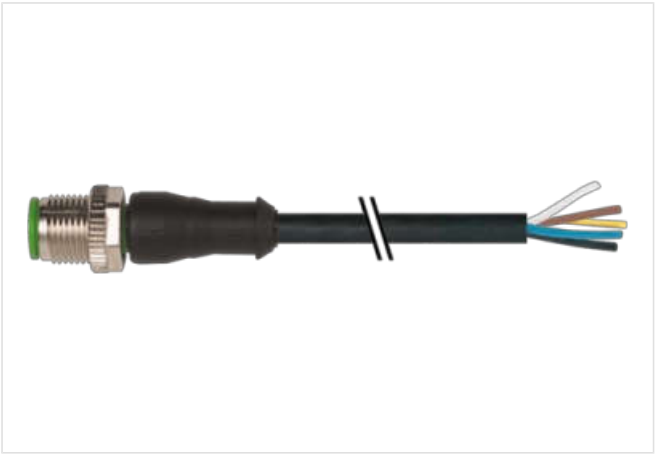

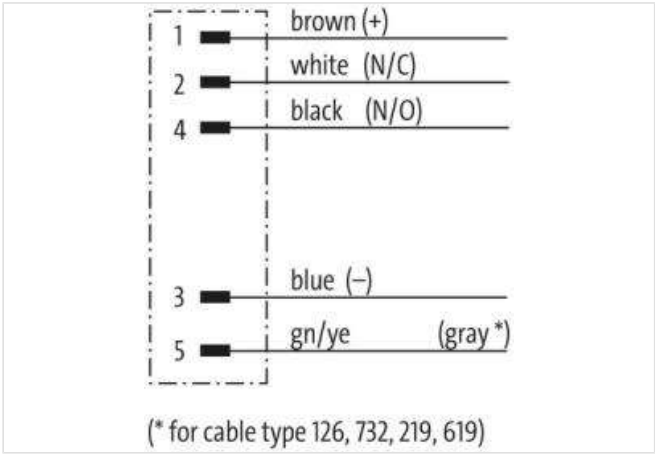

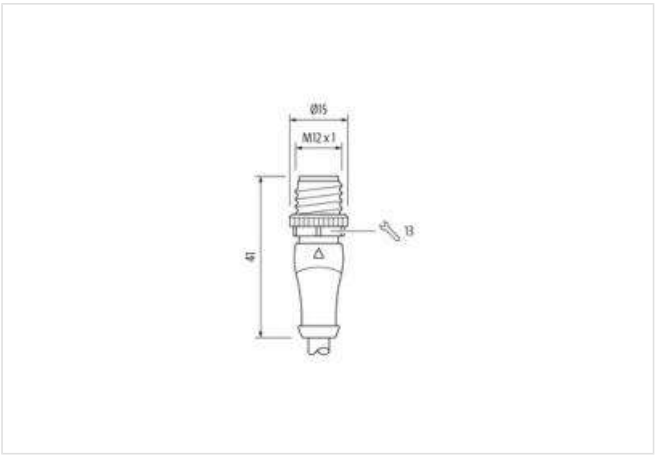

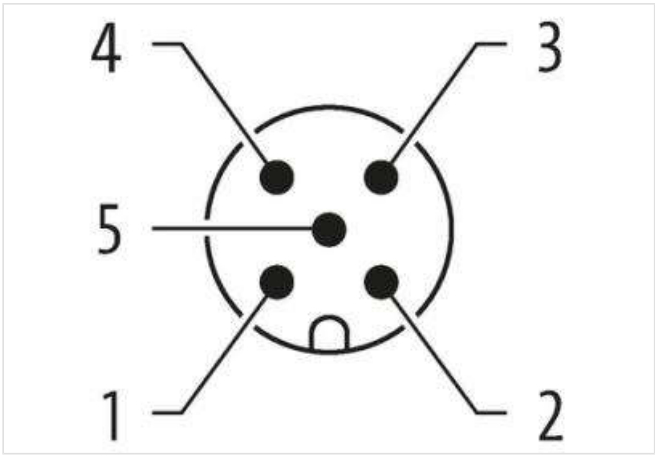

Product may differ from Image

Cable length	2 m

Side 1

Tightening torque	0,6 Nm

The information in this Product-PDF has been compiled with the utmost care.
Liability for the correctness completeness and topicality of the information is restricted to gross negligence. Version: 2024-01-31

Mounting method	inserted, screwed
Family construction form	M12
Thread	M12 x 1
suitable for corrugated tube (internal Ø)	10 mm
Coding	A
Material	PUR
Width across flats	SW13
Degree of protection (EN IEC 60529)	IP65, IP66K, IP67
Side 2	
Stripping length (jacket)	20 mm
Commercial data	
ECLASS-6.0	27279218
ECLASS-6.1	27279218
ECLASS-7.0	27279218
ECLASS-8.0	27279218
ECLASS-9.0	27060311
ECLASS-10.1	27060311
ECLASS-11.1	27060311
ECLASS-12.0	27060311
ETIM-5.0	EC001855
customs tariff number	85444290
GTIN	4048879216999
Packaging unit	1
Electrical data | Supply	
Operating voltage AC max.	125 V
Operating voltage DC max.	125 V
Operating voltage AC (UL-listed)	30 V
Operating voltage DC (UL-listed)	30 V
Current operating per contact max.	4 A
Installation | Connection	
Stripping length (jacket)	20 mm
Mounting set	M12 x 1
Device protection | Electrical	
Additional condition protection degree	inserted, screwed
Pollution Degree	3
Rated surge voltage	1,5 kV
Material group (IEC 60664-1)	I
Mechanical data | Material data	
Coating locking	Nickeled
Coating of fitting	nickel plated
Locking material	Zinc die-casting
Material screw connection	Zinc die-casting
Mechanical data | Mounting data	
Mounting method	inserted, screwed, Shaking protection
Environmental characteristics | Climatic	
Operating temperature min.	-25 °C
Operating temperature max.	85 °C
Additional condition temperature range	depending on cable quality
Conformities, approvals	
Product standard	DIN EN 61076-2-101 (M12)
Cable	

The information in this Product-PDF has been compiled with the utmost care.
Liability for the correctness completeness and topicality of the information is restricted to gross negligence. Version: 2024-01-31

MURR ELEKTRONIK
stay connected

No./diameter of wires	5× 0.34 mm²
Wire isolation	PVC (br, wh, bl, bk, gnye)
Outer Ø	5.2 mm ±5%
Cable identification	615
Cable Type	1 (PVC)
Approval (cable)	UL (AWM-Style 2464/1731), CSA
Cable weight [g/m]	48,4 g
Material wire	Cu wire, bare
Resistor (core)	max. 60 Ω/km (20 °C)
Single wire Ø (core)	0.15 mm
Construction (core)	19× 0.15 mm (multi-strand wire class 5)
Diameter (core)	5× 0.34 mm²
AWG	similar to AWG 22
Material wire isolation	PVC
Material property wire insulation	CFC-, cadmium-, silicone- and lead-free
Shore hardness wire isolation	45 ±5 D
Wire-Ø incl. isolation	1.25 mm ±5%
Color/numbering of wires	br, bk, bl, wh, gnye longitudinally striped
Stranding combination	5 wires twisted around central filler
Shield	no
Material jacket	PVC
Material property (jacket)	CFC-, cadmium-, silicone- and lead-free
Shore hardness jacket	85 ±5 A
Outer-Ø (jacket)	5.2 mm ±5%
Color jacket	black
Jacket Color	black
chemical resistance	good resistance to oil, gasoline and chemicals
thermal resistance	flame retardant UL 1581 VW1 / CSA FT1
Nominal voltage	UL 300 V AC
Test voltage	2000 V AC
Current load capacity	to DIN VDE 0298-4
Temperature range (fixed)	-30...+80 °C
Temperature range (fixed)	-30...+80 °C
Temperature range (mobile)	-5...+80 °C
Temperature range (mobile)	-5...+80 °C
Bend radius (fixed)	5× outer Ø
Bend radius (moving)	10× outer Ø
Bend radius (moving)	10× outer Ø
Material jacket	PVC (UL/CSA)

The information in this Product-PDF has been compiled with the utmost care.
Liability for the correctness completeness and topicality of the information is restricted to gross negligence. Version: 2024-01-31