CIRCUIT DIAGRAM

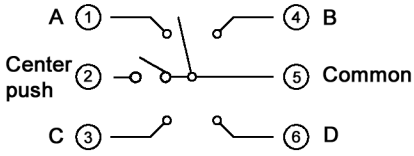

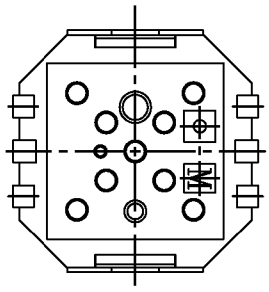

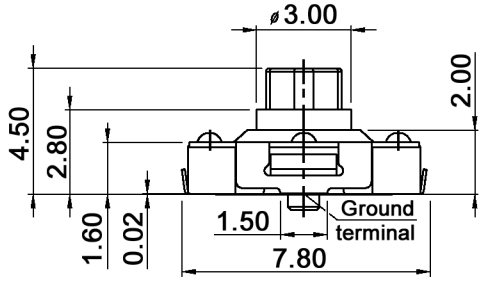

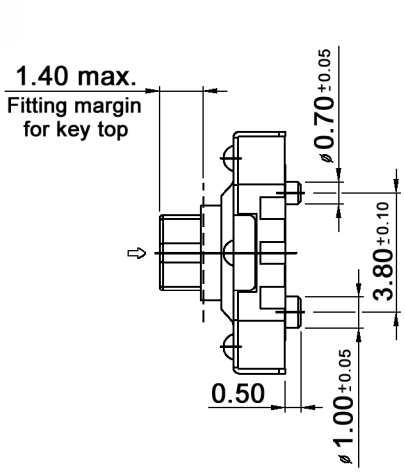

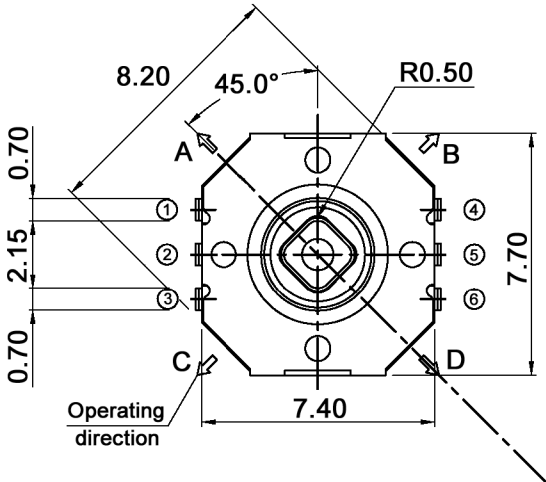

P.C.B. LAYOUT

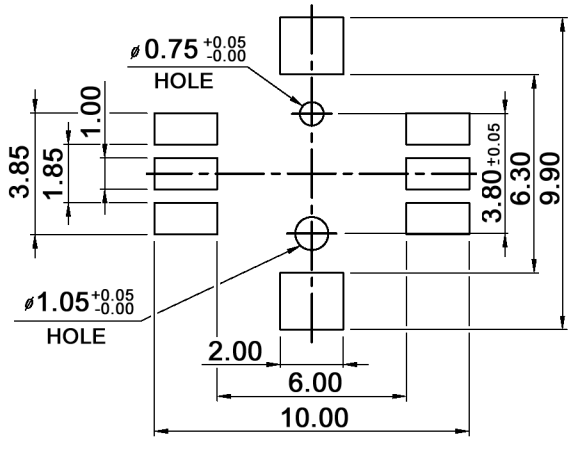

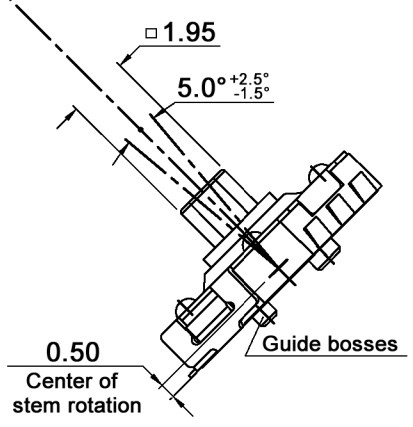

Compliance: RohS II (2011/65/EU)

Tolerances: max. ±0.2mm			Date	Name
			09/05	dr
Operating temperature	06/15	dr		
General tolerances	06/15	dr		
Revised	11/13	dr		
Soldering conditions	11/13	dr		
Modifications	Date	Name		

TSSJ 5-J

knitter-switch

30 06 40

Page 1/2

Specifications:

Contact rating:	50mA, 12V DC
Contact resistance:	100mOhm max.
Insulation resistance:	100MOhm min.
Dielectric strength:	250V AC (50 or 60 Hz) for 1 minute
Operating temperature:	-40°C to +85°C
Storage temperature:	-40°C to +85°C
Operating force:	center: 320 +/-50g; 4 directions: 160 +/-50g
Mechanical life:	100 000 cycles min.
Travel:	(center push) 0.25mm +0.1/-0.2mm
Material:	Cover: C7701RH
	Stem: high-temp. thermoplastic LCP
	Contact: SUS301CSP-EH
	Terminal: C5210R-H, silver plated
	Base: high-temp. thermoplastic LCP, black

Soldering conditions:

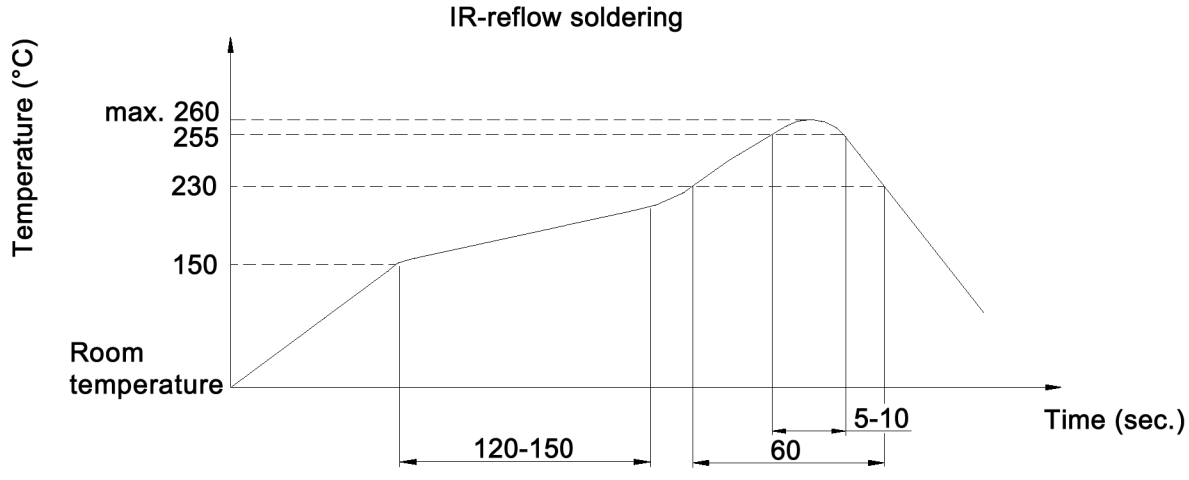

Compliance: RohS II (2011/65/EU)

Tolerances: max. ±0.2mm			Date	Name	TSSJ 5-J
			09/05	dr	
			knitter-switch	30 06 40	Page 2/2
Modifications	Date	Name			