E11799

Mounting adapter for tie-rod/integrated profile cylinders

ADAPT TIE ROD/PROFILE/CYL

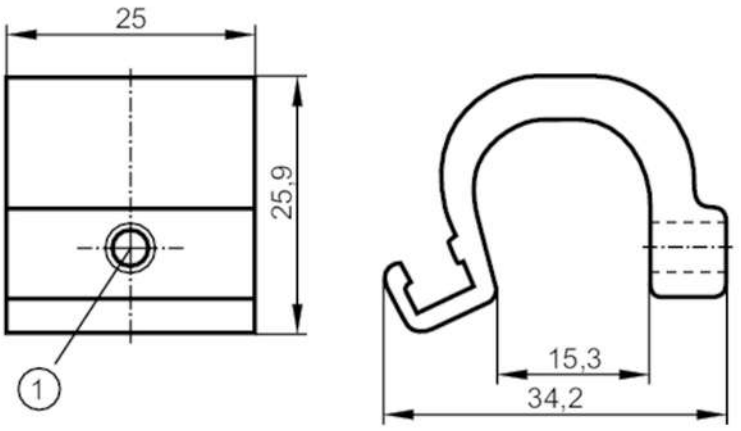

1 Mounting screw SW 2.5

Application		
Design		for types MKT
Mechanical data		
Weight	[g]	21.4
Dimensions	[mm]	25.9 x 25 x 34.2
Materials		Adapter: aluminium; screw: stainless steel
Clamping range	[mm]	9...15
Remarks		
Pack quantity		1 pcs.