Your Expert Partner for **Human Machine Interfaces**

Front protective cap

Distribution by Rs-online

31-924.2

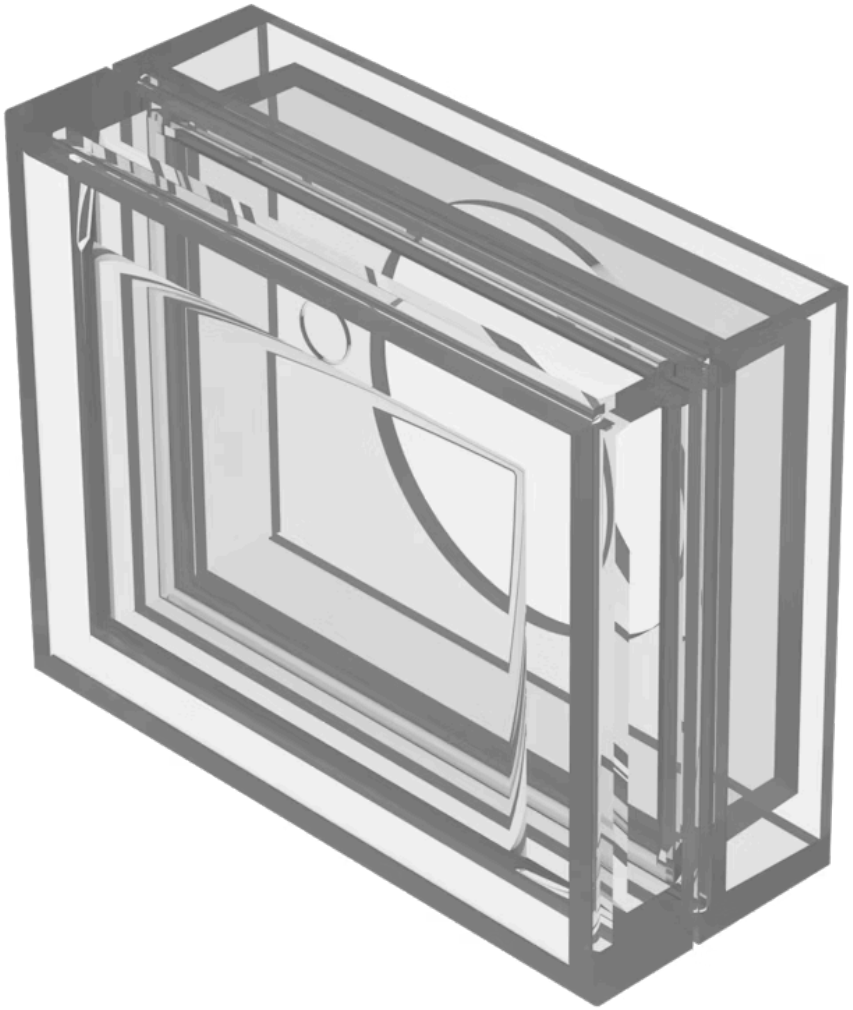

https://rs-online.eao.com/component/31-924.2/...

Your product:

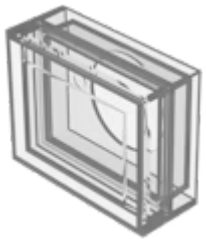

31-924.2
Front protective cap

FRONT

Colour: Colourless

MECHANICAL CHARACTERISTICS

Weight: 0.004 kg

OTHER

Short Description: Front protective cap, 30 mm x 24 mm, 24 mm x 18 mm, transparent, Colourless

Titel Accessory: Front protective cap

Dimension: 30 mm x 24 mm

Internal size: 24 mm x 18 mm

Product attributes: Two-part

Optics: transparent

Mounting cut-outs:

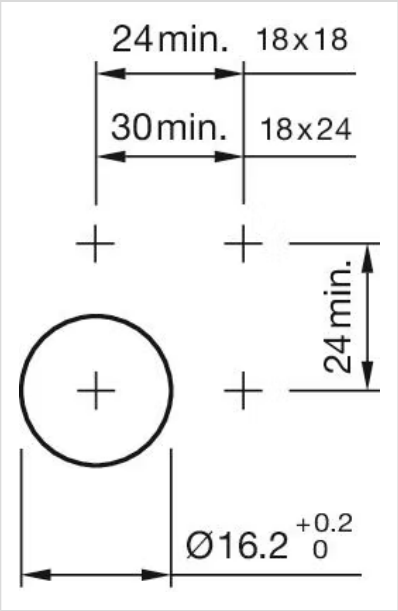

Dimension drawings:

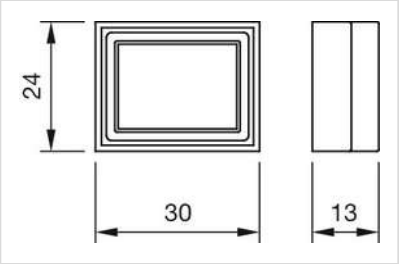

for Part No. 31-924.2