# INSTRUCTION MANUAL

EN

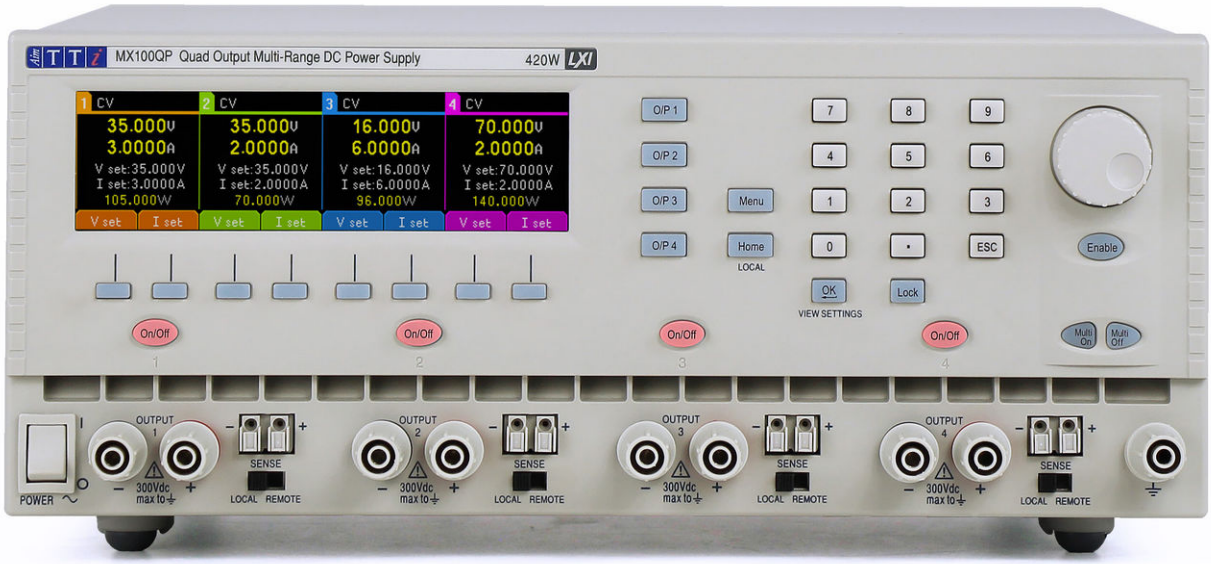


# MX100Q/QP & MX103Q/QP

Quad Output Laboratory Power Supply

# 1 - Product Description


1. **Product Description** ..... 4

Power Capability ..... 4

Available Ranges ..... 4

2. **Safety** ..... 5

Symbols ..... 5

Safety Notices ..... 6

3. **Installation** ..... 7

Mains Operating Voltage ..... 7

Mains Lead ..... 7

Mounting ..... 7

Ventilation ..... 7

4. **Instrument Overview** ..... 8

5. **Getting Started** ..... 10

Using this manual ..... 10

Switching on ..... 10

Display ..... 11

Initial operation ..... 12

Setting with Individual Output Screens ..... 13

Setting Over-Voltage and Over-Current protection ..... 14

Setting the Voltage/Current Range ..... 15

Store and Recall of Settings ..... 16

The System Menu Screen ..... 16

Voltage Tracking ..... 16

OVP /OCP TripLink ..... 17

Display Symbols ..... 17

6. **Menu - Advanced Functions** ..... 18

Menu ..... 18

Setting Voltage Tracking ..... 18

Current Meter Averaging Setup ..... 19

Store and Recall of Settings for All Outputs ..... 19

Multi-On / Multi-Off Operation and Sequencing ..... 20

Setting TripLink OVP/ OCP ..... 21

Pass Code Locking of the Front Panel ..... 21

System Preferences ..... 22

Setting to Factory Defaults ..... 22

Adjusting LCD Brightness ..... 22

Calibration ..... 22

Remote Control Interfaces (P versions only) ..... 22

**7. Changing System Preferences ..... 23**

Status at Power-up ..... 23

Alert Sound (Beep) ..... 23

Spin wheel Function ..... 23

Compatibility Mode ..... 23

**8. Notes on Operation ..... 24**

Accuracy and Resolution ..... 24

Remote Sense ..... 24

Parallel Wiring of Outputs ..... 25

Series Wiring of Outputs ..... 26

Instantaneous Current Output ..... 27

Output On/Off and Response Speed ..... 27

Using OVP and OCP ..... 28

Over-temperature Trip (OTP) ..... 28

**9. Remote Interface Operation (MX-P Versions only) ..... 29**

Remote Interface Configuration ..... 29

**10. Remote Commands (MX- P versions only) ..... 41**

General ..... 41

Command List ..... 42

# 1 - Product Description


11. Maintenance ..... 47

Cleaning ..... 47

Fuse ..... 47

Calibration ..... 47

Firmware Update (MX-P only) ..... 47

12. Technical Specifications ..... 48

13. Default Values ..... 51

14. Appendix 1: ..... 52

Setting the Voltage/Current Range in Compatibility Mode ..... 52


The latest revisions of this manual, device drivers, and software tools can be downloaded from: http://www.aimtti.com/support

# 1. PRODUCT DESCRIPTION

The MX100Q is a quad-output laboratory power supply incorporating four outputs of similar power and features. Each output can provide 0 to 35 volts at 0 to 3 amps (105 watts), with range switching extending its capabilities to provide voltages up to 70V and currents up to 6A (210 watts).

The MX103Q is a quad-output laboratory power supply with three outputs that provide 0 to 35 volts at 0 to 6 amps (210 watts), and a fourth providing 0 to 35 volts at 0 to 3 amps (105 watts)

Power sharing allows up to 420W total output power at any time across the four outputs without disabling other outputs.

Mixed-mode regulation is used, which combines switch-mode power conversion with linear final regulation to give good noise and transient performance.

All information is displayed on a large backlit graphic LCD, and control is via soft keys together with a numeric keypad and spin wheel.

Advanced features include 50 settings memories for each output plus 50 further memories that record the settings for all four outputs together.

TripLink is a feature that allows the OVP and OCP trips of one output to be linked to other outputs. If a trip occurs, all linked outputs will be tripped simultaneously.

Multi-On and Multi-Off keys supplement the individual output On/Off keys and can be programmed to turn the outputs on or off in a timed sequence.

The front panel can be locked to prevent accidental changes to settings.

The power supply is housed in a ¾ rack width, 3U high case with front input ventilation. An intelligent fan is used to minimise cooling noise.

The MX100Q & MX103Q P version has the same manual control features and adds USB, RS232, GPIB (Optional), and LXI-compliant LAN interfaces together with duplicate power and sense terminals at the rear.

## Power Capability

<table>
<tr><td></td><td colspan="3">MX100Q/P</td><td colspan="3">MX103Q/P</td></tr>
<tr><td>Output</td><td>Voltage Range</td><td>Current Range</td><td>Maximum Power</td><td>Voltage Range</td><td>Current Range</td><td>Maximum Power</td></tr>
<tr><td>1</td><td rowspan="2">0 to 35V</td><td rowspan="2">0.1 mA to 6A</td><td rowspan="3">210W</td><td rowspan="3">0 to 35V</td><td rowspan="2">0.1 mA to 6A</td><td rowspan="2">210W</td></tr>
<tr><td>2</td></tr>
<tr><td>3</td><td rowspan="2">0 to 70V</td><td rowspan="2">0.1 mA to 3A</td></tr>
<tr><td>4</td><td>0.1 mA to 3A</td><td>105W</td></tr>
<tr><td></td><td colspan="6">Total power available across all channels: 420W</td></tr>
</table>

## Available Ranges

<table>
<tr><td colspan="4">MX100Q/P</td><td colspan="4">MX103Q/P</td></tr>
<tr><td>O/P 1</td><td>O/P 2</td><td>O/P 3</td><td>O/P4</td><td>O/P 1</td><td>O/P 2</td><td>O/P 3</td><td>O/P 4</td></tr>
<tr><td colspan="8">35V/3A</td></tr>
<tr><td colspan="2">16V/6A</td><td colspan="2">70V/1.5A</td><td colspan="3">16V/6A</td><td>-</td></tr>
<tr><td colspan="2">35V/6A</td><td colspan="2">70V/3A</td><td colspan="3">35V/6A</td><td>-</td></tr>
</table>

# 2. SAFETY

## Symbols

This instruction manual contains information and warnings which must be followed by the user to ensure safe operation and to retain the instrument in a safe condition.

The following symbols are displayed on the instrument and throughout the manual, to ensure the safety of the user and the instrument, all information must be read before proceeding.

**WARNING**



Indicates a hazard that, if not avoided, could result in injury or death.

**CAUTION**



Indicates a hazard that could damage the product and may result in loss of important data or invalidation of the warranty.

**NOTE**



Indicates a helpful tip.

**EXAMPLE**



Indicates an example to show further details.



The terminal is connected to chassis ground.



Mains supply OFF



Mains supply ON.



Alternating current (AC).

## Safety Notices

This instrument is:

- A safety Class I instrument according to IEC classification and has been designed to meet the requirements of EN61010-1 (Safety Requirements for Electrical Equipment for Measurement, Control and Laboratory Use). It is an Installation Category II instrument intended for operation from a normal single-phase supply.

- Designed for indoor use in a Pollution Degree 2 environment in the temperature range 5°C to 40°C, 20%- 80% RH (non-condensing). ). It may occasionally be subjected to temperatures between +5°C and –10°C without degradation of its safety. Do not operate while condensation is present.

- Tested in accordance with EN61010-1 and has been supplied in a safe condition. This instruction manual contains some information and warnings which have to be followed by the user to ensure safe operation and to retain the instrument in a safe condition.

**WARNING**



Do not operate while condensation is present.

Do not operate outside its rated supply voltages or environmental range.

THIS INSTRUMENT MUST BE EARTHED.

Ensure that only fuses with the required rated current and of the specified type are used for replacement.

The use of makeshift fuses and the short-circuiting of fuse holders is prohibited.

Use of this instrument in a manner not specified by these instructions may impair the safety protection provided.

Any interruption of the mains earth connector, inside or outside, will make the instrument dangerous. Intentional interruption is prohibited. The protective action must not be negated by the use of an extension cord without a protective conductor.

Any adjustment, maintenance, and repair of the opened instrument under voltage must be avoided. When connected, terminals may be live and opening the covers or removal of parts (except those that can be accessed by hand) may expose live parts.

Voltages above 60VDC are hazardous live according to EN 61010-1, great care must be taken when using the power supply at voltages above this level.
Capacitors inside the power supply may still be charged even if the power supply has been disconnected from all voltage sources but will be safely discharged about 10 minutes after switching off.

To avoid electric shock or damage to the instrument, never allow water to get inside the case. If the instrument is clearly defective, or has been subject to mechanical damage, excessive moisture, or chemical corrosion, the safety protection may be impaired, and it must be withdrawn from use and returned for repair.

**CAUTION**



Do not wet when cleaning; use only a soft dry cloth to clean the screen.

# 3. INSTALLATION

## Mains Operating Voltage

This instrument has a universal input range and will operate from a nominal 115V or 230V mains supply without adjustment. Check that the local supply meets the AC Input requirement given in the Specification see '*Technical Specifications*'.

## Mains Lead

Connect the instrument to the AC supply using the mains lead provided. Should a mains plug be required for a different mains outlet socket, a suitably rated and approved mains lead set should be used, which is fitted with the required wall plug and an IEC60320 C13 connector for the instrument end. To determine the minimum current rating of the lead set for the intended AC supply, refer to the power rating information on the equipment or in the Specification.

## Mounting

This instrument is suitable both for bench use and rack mounting. It is delivered with feet for bench mounting. The front feet include a tilt mechanism for optimal panel angle.

A rack kit for mounting in a 19" rack is available from the manufacturers, or their agents and distributors overseas.

## Ventilation

The power supply is cooled by an intelligent multi-speed fan which vents at the rear. Cooling air is drawn in through slots in the front panel directly above the terminals and by slots in the base of the unit close to the front.

In a rack-mounted situation, when using the recommended Aim-TTi rack mount (RM460), no additional space is required above or to the sides of the unit. Some air space below the unit will ensure the best possible airflow and the lowest fan speeds for a given power but is not required.

Ensure that the ventilation slots and rear fan exhaust are not obstructed. In the event of overheating, a temperature trip will turn all of the outputs off – see *'Over-temperature Trip (OTP)'.*

# 4. INSTRUMENT OVERVIEW

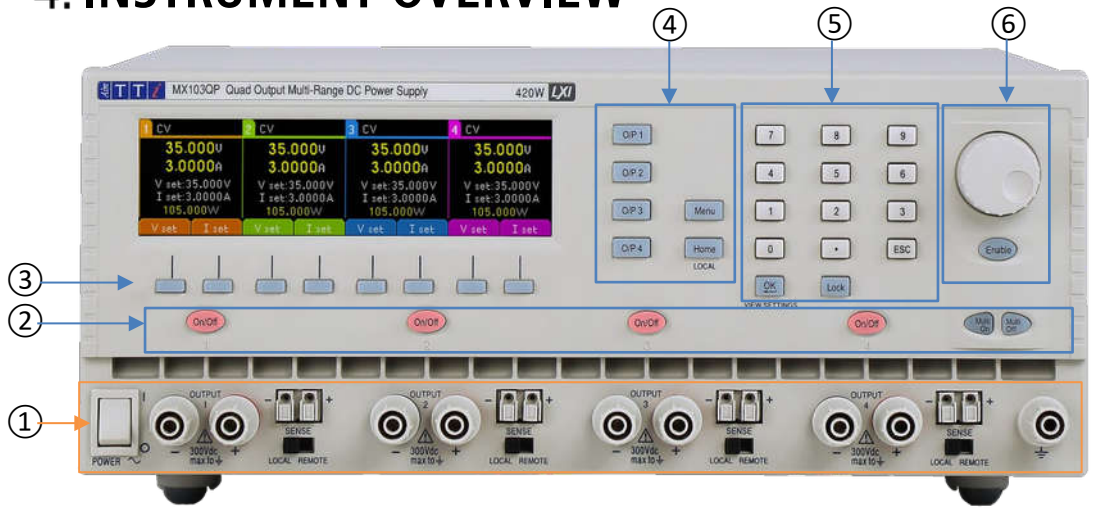


| | | |
|---|---|---|
| ① | Power | |
| | Output terminals<br><br>⚠<br><br>⚠ | For each output, the load should be connected to the positive (red) and negative (black) terminals marked OUTPUT. Both are fully floating and can be connected to the ground terminal or to a terminal of another output. The outputs of the power supply are fully floating and may connected to other equipment resulting in the voltage appearing at a terminal being greater than the output voltage alone.<br>CAUTION The maximum permissible voltage between any terminal and earth ground (⏚) is 300VDC; the maximum permissible voltage between either terminal of one output and either terminal of another output on the same power supply is also 300VDC. Exceeding the maximum reverse voltage (40V [80V for MX100Q OP3 & 4]) and current (3A) will damage the unit<br>**WARNING Such voltages are exceedingly hazardous and great care should be taken by the user. The front terminals are intrinsically touch proof, but hazard may still exist depending upon the type of connection made to the terminal. On no account should the connections be touched under such use. Voltages appearing on the front terminals will also appear on the rear terminals** |
| | | Remote sense connections to the load, if required, are made from the positive (+) and negative (-) SENSE terminals. Switch the SENSE switch to REMOTE when remote sensing is required. Switch back to LOCAL when remote sensing is not in use. See *'Remote Sense'* for more information. |
| | | The Earth terminal is connected to the chassis and safety earth ground. |
| ② | DC output On/Off | Each output has an allocated DC On/Off key. Alternatively turn all four (or a combination of) outputs on or off simultaneously using the Multi On Multi Off . see '*Multi-On / Multi-Off Operation and Sequencing*'. |
| ③ | Soft Keys | The function of these keys changes and is shown on the display above each key. |
| ④ | Display control keys | (Home) displays all four outputs simultaneously. |
| | | (Menu) provides access to advanced functions. |
| | | (O/P n) show more detailed information for each individual output. |
| ⑤ | Keypad | Voltage or current can be set using the numeric keypad, see '*Initial* operation'. |
| | Lock key | The LOCK key will light when active, indicating that the entire front panel is locked. In this mode, only navigation between menus is permitted. Long press to deactivate the lock, it is also possible to lock the front panel using a passcode. See '*Menu - Advanced Functions'* for more details. |
| ⑥ | Spin wheel | Alternative method for adjusting voltage or current. See '*Initial* operation'. |

# 4 - Instrument Overview




| | | |
|---|---|---|
| ① | AC power inlet | Connect to AC mains using the power lead provided. See '*Mains Lead*' for more details. |
| ② | Power and sense terminals | NOTE Image shows the protective cover in place as supplied by the manufacturer. The Output and Sense terminals are duplicated on the rear panel terminal block marked Output +, Output-, Sense + and Sense-.<br>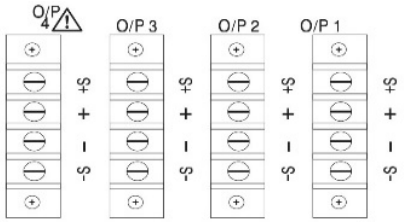<br><br>These connections are paralleled with their front panel equivalents. Switch the front panel LOCAL/REMOTE switch to REMOTE when remote sensing is required. When the rear panel output terminals are used, the use of remote sense is always recommended to ensure that output regulation is maintained within specification; connections can be made to either the front or the rear remote sense terminals but never to both pairs of terminals at the same time. Switch back to LOCAL when remote sensing is not in use.<br>WARNING **Voltages appearing on the front terminals will also appear on the rear terminals. The rear terminals have protective walls but are not intrinsically touch proof. A protective cover is provided and must be used if voltages above 60 volts DC could be present; it is advised that the cover is used at all times. If any hazardous voltages could exist, all connections to the front or rear terminals must be made with the power switched off on all voltage sources** |
| MX100QP and MX103QP only | | |
| All interfaces are fully isolated from the power supply output terminals. USB, RS232 and GPIB interfaces are connected to chassis ground. The LAN interface is isolated by standard network transformers. | | |
| ③ | USB | The USB port accepts a standard USB cable. The Windows plug-and-play functions should automatically recognise that the instrument has been connected. |
| ④ | RS232 | 9-way D-type serial interface connector |
| ⑤ | LAN | The LAN interface is designed to meet 1.5 LXI (LAN extensions for Instrumentation) Core 2016. Remote control using the LAN interface is possible using a TCP/IP Socket protocol. |
| ⑥ | GPIB (optional) | GPIB 1A is available as a retrofittable optional extra.<br>The default GPIB address is 11 |

# 5. GETTING STARTED

## Using this manual

This section is a general introduction to the operation of the instrument and is intended to be read before using the Power Supply for the first time.

In this manual front panel, keys and sockets are shown in capitals, e.g., ON, OFF. Text and messages displayed on the LCD are shown in a different font, e.g., *V Set, I Set.*

Throughout this manual, the navigation through menus will be shown at the top of a section using the following format:

Menu>Sub Menu>Option

## Switching on

Connect the instrument to the AC supply using the mains lead provided.

Press the POWER switch. At power-up a screen is displayed that shows the firmware revision number and a brief description of the starting conditions. These can be changed from System Preferences if required – see *'Changing System Preferences'.*

**WARNING**



To fully disconnect from the AC supply, unplug the mains cord from the back of the instrument or switch off at the AC supply outlet; make sure that the means of disconnection are readily accessible. Disconnect from the AC supply when not in use.

# Display

## The Home Screen

The Home screen shows the primary information for all four outputs simultaneously whilst enabling voltage and current to be set for any output.

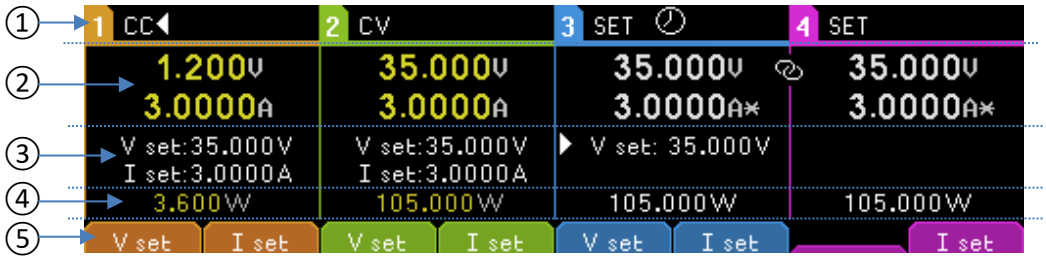


| | | | |
|---|---|---|---|
| ① | **Status bar** | | |
| | Output | | 1 (orange), 2 (green), 3 (blue), 4 (pink) |
| | Operating mode status | *Output On* | CV (constant voltage): The output voltage is equal to the set value, the current setting represents the limiting value of current that could flow (the current limit)<br>CC◀ (constant current):The output current is equal to the set value, the voltage setting represents the limiting value of voltage that could be applied (the voltage limit).<br>*Switch-over between CV and CC modes occurs automatically, dependent upon the load conditions and the settings. The voltage and current settings may also be described as limits since they represent the maximum values that can apply at the load. It is also possible to set an audible alert when switching to CC mode – see 'Alert Sound (Beep)* |
| | | *Output Off* | SET (settings) |
| | Multi-On/ Multi-Off | | Multi-On/Multi-Off not set to defaults (set to Delayed or Never). See '*Multi-On / Multi-Off Operation and Sequencing*' |
| ② | **Meter** | *Output On* | Live output voltage and current (yellow). |
| | | *Output Off* | Set voltage and current (grey). |
| | Tracking | | Link symbol shown between the Master and Slave, V set is disabled on the slave output. See *'Setting Voltage Tracking'* |
| | Current averaging | | Current averaging (Iavg) active on selected output. See *'Iavg'* |
| ③ | **Settings** | *Output On* | Set voltage (V set), Set current (I set). |
| | | *Output Off* | Only shown if editing the value (the meter shows set values). |
| ④ | **Power calculation** | *Output On* | Live power output supplied, in Watts (yellow). |
| | | *Output Off* | Calculated power of the settings in Watts (white). |
| ⑤ | **Soft key labels** | | Set voltage (V set) or current (I set) for each of the outputs. Press the associated soft key to select.<br>NOTE If tracking is enabled, V set is unavailable on the slave output. |
| | | | When active, ▶ appears in front of the selected parameter. Pressing the same key again or pressing ESC (Escape) cancels the key and disables all setting capability. |

## Initial operation

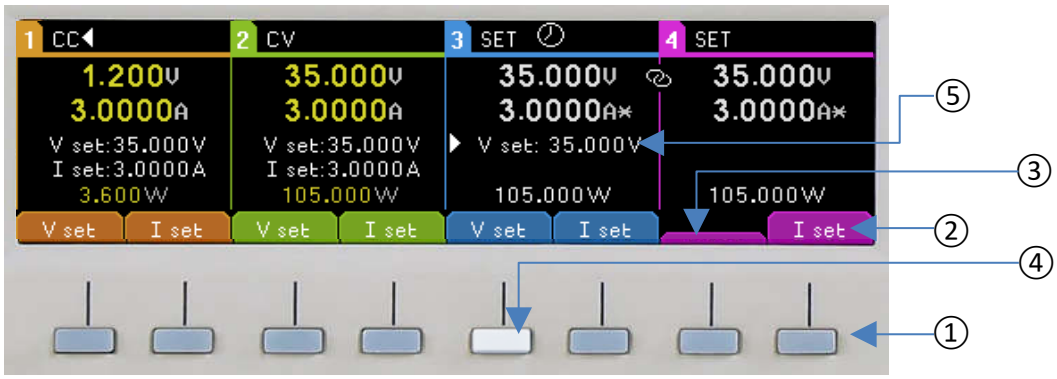


### Selecting the parameter to edit

The function of the soft keys ① change as the instrument is operated, the current function is shown on the display in a box above each key ②. A hidden box means that the key currently has no function ③.

For example, to set the voltage, press the soft key associated with the required function ④, the selected key is illuminated.

When active, ▶ appears in front of the selected parameter ⑤. (Pressing the same key again or pressing ESC (Escape) cancels the key and disables all setting capability.)

### Setting voltage or current using the numeric keypad



Press the required numeric key, the OK key will start to flash. When the numeric value entry is completed, press OK to be accept and action. Entry can be abandoned at any point by pressing ESC (Escape)

Entry is in volts or amps to a resolution of 0.001 volts and 0.0001 amps for 16V and 35V ranges, and 0.01 volts and 0.001 amps for 70V range on the MX100Q/P. Entries need only to be completed as far as the desired digit of resolution, e.g. to enter 5.000 volts it is only necessary to enter 5 followed by OK.

### Setting voltage or current using the spin wheel




The spin wheel is disabled by default, press the Enable key to activate, the key will be illuminated when active, the spin wheel will then change the output settings immediately (live), no OK confirmation is required.

The spin wheel has a non-linear action. If it is moved slowly the value is incremented in minimum steps (1mV/0.1mA for 16V and 35V ranges, or 10mV/0.1mA for 70V range on MX100Q/P). When the spin wheel is rotated more rapidly the rate of increment is increased, enabling the value to be changed quickly. The action of the spin wheel can be changed from System Preferences to reduce the speed-related increment rate if preferred. see '*Changing System Preferences*' for more details.

### Turning the Output on

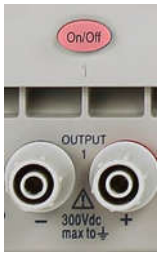


Alternate presses of the On/Off key turn the output on or off. The on state is indicated by the key being illuminated in red. At power-up, the default behaviour is for all the outputs to be set to off. However, the user can change this default setting such that the outputs are restored to their condition when the instrument was switched off. This change is made from System Preferences, see '*Changing System Preferences*' for more details.

## Setting with Individual Output Screens

Each output has its own display screen selected with the key's O/P 1, O/P 2, O/P 3 and O/P 4. The selected key is illuminated. This screen provides more information than the main (Home) screen and allows additional parameters to be set.

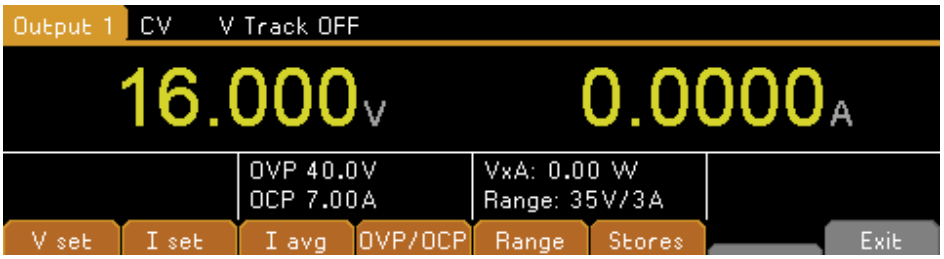


The top line shows the operating mode (CV, CC or SET) together with the voltage tracking status. The meters are displayed in a larger font, and the complete settings status for the output is shown below them.

The eight soft keys are used to set voltage and current (V set and I set), over-voltage and over-current protection levels (OVP & OCP), current meter averaging (I avg), range selection (Range) and store or recall of settings (Stores).

Setting voltage or current is as previously described in *'Initial operation'*.

### Power Display (VxA)

The power being supplied to the load (VxA) is displayed in watts on the lower right-hand side. The value is calculated from the metered values of voltage and current and is displayed with a maximum resolution of 0.001 watts; and 0.01 watts for outputs 3 and 4 in 70V range on the MX100Q/P model.

### Selecting Current Meter Averaging

#### Iavg

Current meter averaging is useful when the load current is varying rapidly. It can help to reduce the variation in the reading and make the display easier to follow.

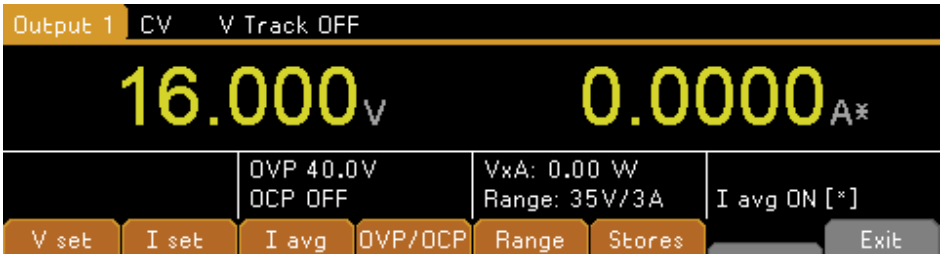


Selection is done from each individual output screen. Pressing the soft key marked Iavg toggles current meter averaging on or off. The present status is shown in the area above the key and by an asterisk ( * symbol) appearing directly after the current meter. This * symbol is also displayed on the home screen.

Three levels of averaging representing low, medium or high can be selected from the System Menu – see *'Selecting Current Meter Averaging'* for more details. The default value is medium.

## Setting Over-Voltage and Over-Current protection

### OVP/OCP

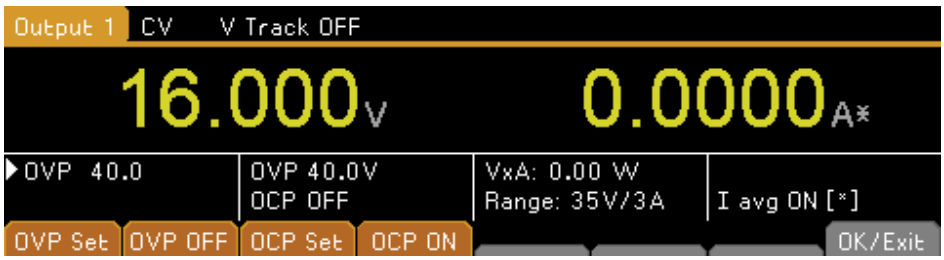


The power supply offers user adjustable over-voltage protection (OVP) and over-current protection (OCP). If a voltage is detected that exceeds the OVP level, or a current is detected that exceeds the OCP level, the output is switched off and the message OVP or OCP is displayed.

The OVP and OCP values are shown in the table below:

| | MX100Q/P | | MX103Q/P | |
|---|---|---|---|---|
| Output | OVP | OCP | OVP | OCP |
| 1 | 1V to 40V | 0.01A to 7A | 1V to 40V | 0.01A to 7A |
| 2 | 1V to 40V | 0.01A to 7A | 1V to 40V | 0.01A to 7A |
| 3 | 1V to 80V | 0.01A to 3.5A | 1V to 40V | 0.01A to 7A |
| 4 | 1V to 80V | 0.01A to 3.5A | 1V to 40V | 0.01A to 3.5A |

Pressing the OVP/OCP soft key creates a new set of soft keys from which OVP & OCP values can be set or turned on or off.

Pressing OVP Set causes the key to illuminate and makes the OVP value settable. A new value can be entered using the numeric keypad or by the spin wheel if enabled. OVP can be turned off by pressing OVP OFF and turned back on by pressing OVP On. The previous OVP value is retained when OVP is off and is displayed in brackets.

Similar capabilities are provided for controlling OCP.

**NOTE**

When set to OFF, the function is not completely disabled but is set to the maximum value for the output. Thus, if OVP was set to OFF on output 1 and an external voltage greater than 40V was applied to the terminals, an OVP trip would occur.

More information on using OVP and OCP is provided in section '*Using* OVP and OCP'.

## Setting the Voltage/Current Range

### Range

Each output has more than one range:

| MX100Q/P | | | | MX103Q/P | | | |
|---|---|---|---|---|---|---|---|
| O/P 1 | O/P 2 | O/P 3 | O/P4 | O/P 1 | O/P 2 | O/P 3 | O/P 4 |
| 35V/3A | | | | | | | |
| 16V/6A | | 70V/1.5A | | 16V/6A | | | - |
| 35V/6A | | 70V/3A | | 35V/6A | | | - |

Pressing the Range soft key brings up a menu screen which indicates the currently selected range and output with a flashing arrow.

All output ranges can be amended or disabled from this screen using the soft keys, select the output with the up and down arrow soft keys and press the desired range soft key.

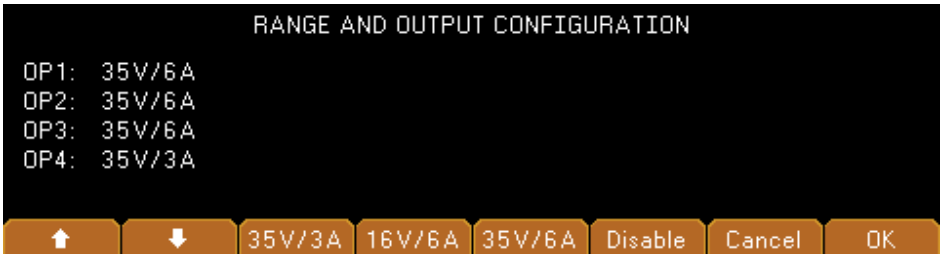


Pressing the cancel soft key will return to the output screen and the range will remain unchanged, pressing the OK soft key will action the changes made.

**NOTE**

A change of range can only be made when the output is off. If the output is on, a pop- up will appear and the output be turned off automatically when the change is made.

### View Settings

Pressing and holding the OK key (also marked View Settings), will show the set Range and allocated power for each channel, plus the allocated and remaining power for all channels combined.



## Store and Recall of Settings

### Stores

Each output has 50 memory stores capable of storing range, voltage, current, OVP and OCP. Pressing the Stores soft key brings up a menu screen which shows the present contents of the memories from which settings can be stored or recalled.

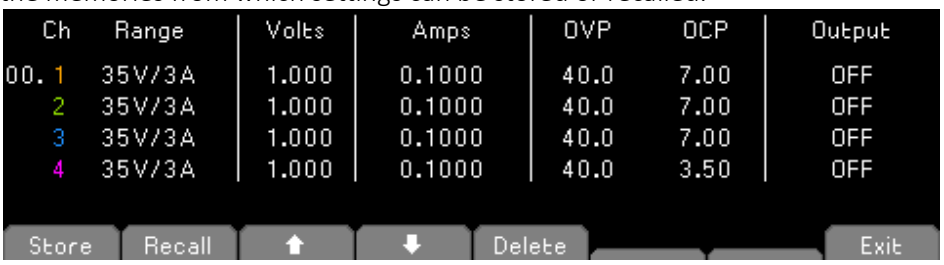


The memories are numbered from 00 to 49 with the currently selected line highlighted. The location can be scrolled using the spin wheel or stepped through using the arrow keys. It is also possible to jump directly to a location by entering a two-digit number (e.g., 07 or 45). Unused memory locations are shown by the word Empty.

Pressing the Store key writes the present settings of the output into the selected memory location. If the position already has settings stored within it, a confirmation is required.

### Recall

Pressing the Recall key transfers the stored settings of the selected memory location to the output. This happens immediately when the Recall key is pressed.

**NOTE**

If the recalled range is different from the present range, the output will be automatically turned off.

The contents of a particular location can be deleted by pressing the Delete soft key. A confirmation is required.

From the Delete confirmation screen, it is also possible to delete the contents of all 50 locations by pressing Del All. A confirmation is required.

### Store and Recall for Multiple Outputs

It is also possible to store and recall settings for all four outputs simultaneously. This is described in the *'Store and Recall of Settings for All Outputs'* section.

## The System Menu Screen

The operation of the System Menu screen is selected with the key marked Menu which illuminates when pressed.

System menu functions are described within the *'Menu - Advanced Functions*' section.

## Voltage Tracking

The power supply can be set up such that the voltage of any output tracks that of another, this tracking can be set individually or simultaneously. The tracking status is shown on the top line of the display. Voltage tracking is selected from the System Menu, see '*Setting Voltage Tracking*' for more details.

## OVP /OCP TripLink

TripLink is a feature that allows the OVP and OCP protection trips of one output to be linked to other outputs. If a trip occurs, all linked outputs will be tripped simultaneously, see '*Setting TripLink OVP/ OCP*' for more details.

## Display Symbols

Some functions are indicated by symbols or abbreviation on the display as follows:

| Function | Home Screen | Individual Output Screen |
|---|---|---|
| Output on, constant voltage mode | CV shown on the top line next to the output number | CV shown on the top line |
| Output on, constant current mode | CC shown plus flashing arrow next to the output number | CC shown plus flashing arrow on the top line |
| Output off | SET shown on the top line next to the output number | SET shown on the top line |
| Current meter averaging on | * symbol after current meter | * symbol after current meter (and Iavg ON in small font) |
| Voltage tracking | Link symbol shown between the Master and Slave | V Track ON or OFF shown on top line plus Master or Slave |
| Voltage set above 60V (MX100Q /QP in 70V range) | High voltage symbol after voltage value | High voltage symbol after voltage value |
| Multi-On/Multi-Off not set to defaults (set to Delayed or Never) | Clock symbol on top line next to the mode indication for the affected output | Clock symbol on top line |
| TripLink | - | Link symbol shown beside OVP/OCP value for linked trips. |
| Power supply under remote control (MX100QP only) | REM shown at top right-hand side | REM shown at top right-hand side |
| LAN connection status (MX-P versions only) | LAN symbol shown at top right-hand side. (See note) | LAN symbol shown at top right-hand side (see note) |

**NOTE**

The LAN symbol changes to reflect the connection status. This is detailed within the Remote-Control pages- see '*Remote Interface Operation'.*

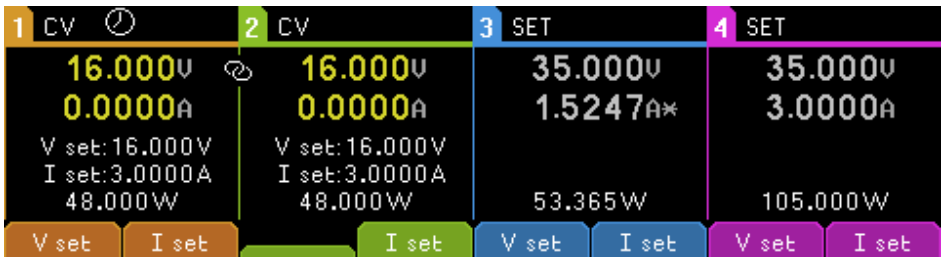


This example screen shows output 1 and 2 in constant voltage (CV) mode and output 3 and 4 showing settings (output off).

Output 1 has Multi-On/Multi-Off is set with a delay., Output 2 is set to track output 1.

Output 3 current meter has current averaging turned on.

# 6. MENU - ADVANCED FUNCTIONS

## Menu

Pressing the key marked Menu selects the System Menu screen, providing access to advanced options and functions.

Each item of the system menu is selected by using the two arrow keys, or by turning the spin wheel until the desired line is highlighted, and then pressing the Select soft key. This selects a menu screen relating to the function selected.

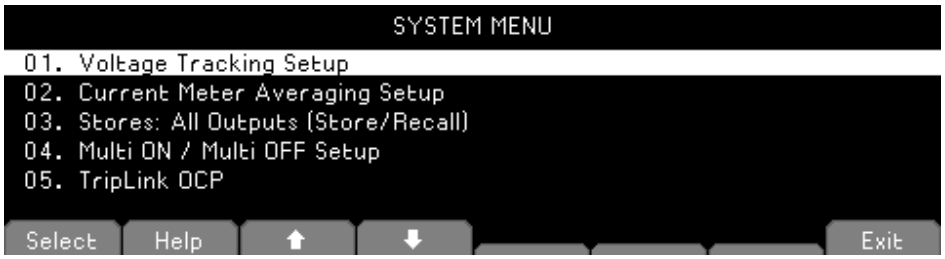


## Setting Voltage Tracking

Menu > Voltage Tracking Setup

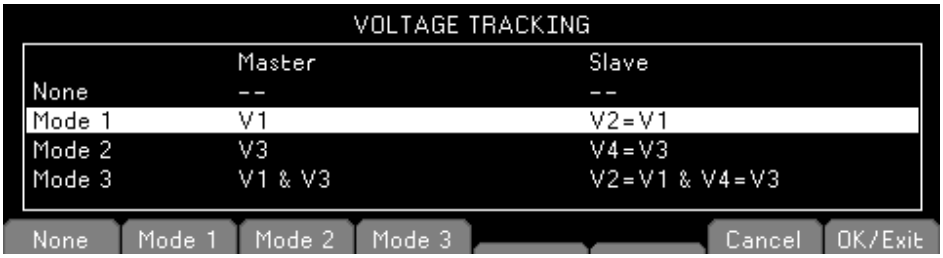


By default, all four outputs are completely independent. However, it is possible to make the voltage of an output always equal to the voltage set on another output. This is called voltage tracking.

Tracking voltages can be useful in setting up adjustable voltages of equal or opposite polarity, or when outputs are wired in parallel or in series.
Three alternative voltage tracking arrangements are possible:

Mode 1: Output 2 tracks Output 1.
Mode 2: Output 4 tracks Output 3.
Mode 3: Output 2 tracks Output 1 *and* Output 4 tracks Output 3.

The controlling output is described as Master, whilst a controlled output is described as Slave. Voltage tracking can only be selected when the voltage range for the Slave output is equal to or higher than that of the Master output.

The tracking condition is displayed on the top line of the display, see *'Display Symbols'.*

**NOTE**

When tracking is set, changing the range of either the Master or Slave output will cancel tracking regardless of the direction of the change.

## Current Meter Averaging Setup

Menu > Current Meter Averaging Setup

The degree of averaging of the current meter reading when Iavg is turned on can be set individually for each output.

The System Menu function "**Current Meter Averaging Setup**" provides an individual choice of **Low, Medium** or **High** for each of the four outputs set via the soft keys. The default value is **Medium**.

## Store and Recall of Settings for All Outputs

Menu > Stores: All Outputs (Store/Recall)

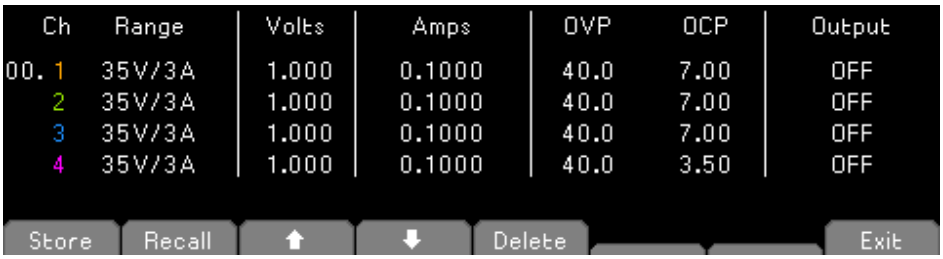


Each output has its own set of 50 memories in which settings can be stored for that output. A further set of 50 memories is provided that allow the user to store and recall the settings status for all four outputs simultaneously.

Unlike the individual memories, which store only Range, Volts, Amps, and OVP/OCP, these memories also store the output ON/OFF state, current meter averaging state, and the Multi-On/Multi-Off settings.

The System Menu function "**Stores: All Outputs (Store/Recall)**" creates a screen similar to the Stores screen for the individual outputs, but with an extra column for ON/OFF. The four outputs are listed on successive rows.

The output On/Off state is included in order to allow memories to be recalled in sequence including the turning of outputs on or off.

**NOTE**

Recalling a memory will override the existing On/Off state and this should be considered when setting up the power supply prior to storing each status entry.

Current meter averaging being set on is indicated by the * symbol after the set current value. If any of the Multi-On/Multi-Off settings are set to **Delay** this indicated by a clock symbol after the On/Off state.

**NOTE**

Output delay settings are only applied when the Multi-On/Multi-Off function is used and not when a memory is recalled.

## Multi-On / Multi-Off Operation and Sequencing

Menu > Multi-On/Multi-Off Setup




The two keys on the bottom right-hand side marked Multi-On and Multi-Off control the On and Off behaviour for all four outputs. By default, these keys provide a synchronous On/Off capability whereby all four outputs are turned on or turned off simultaneously by pressing a single key.

The System Menu function "Multi-On/Multi-Off Setup" enables the operation of these keys to be changed to suit the user's requirements. Delays between the switching of the outputs can be introduced to create an On or Off sequence, and any individual output can be excluded from Multi-On or Multi-Off control.

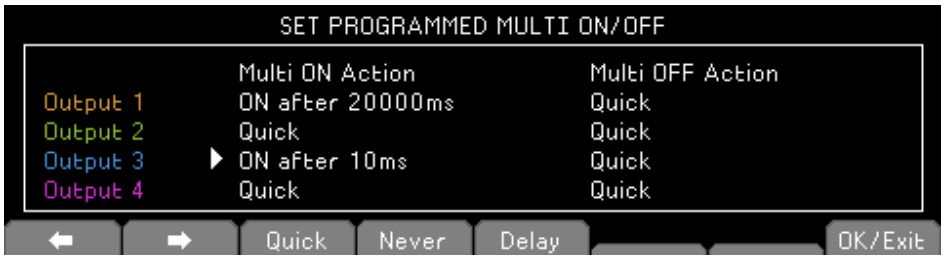


At factory defaults, the On and Off delays are all set to Quick causing them to respond immediately to the key press. The arrow keys move through the On and Off states for the outputs which can be changed using the soft keys.

- **Delay:** Set a delay time in milliseconds between 10ms and 20,000ms using the spin wheel.
- **Never**: Not controlled by the Multi-On or Multi-Off key.
- **Quick**: Immediate response.

**NOTE**

Any previously set delay value is retained when set to Quick or Never and is restored when Delay is selected again.

When a delay is set, a clock symbol is displayed on the top line of the main (Home) display, and of the individual output screen(s) to which it applies.

**NOTE**

The set delays apply only to the initiation of an output being turned on or turned off. The actual delay will depend upon the slew-rate limited on/off times applying to a particular output and its load. See '*Output On/Off and Response Speed*' for more information.

For short delay sequences, the key will flash briefly when pressed. For longer delays it will continue to flash until the sequence is completed. Where the longest delay is below approximately 250ms, the key may not flash at all.

### Emergency Off

When an Off sequence that includes long delays is in progress, a second press of the Multi-Off key will turn all four outputs off immediately, including any outputs omitted from the sequence (i.e., set to Never). Thus, a double press of the Multi-Off key will immediately turn off all the outputs regardless of the sequence settings. The individual output On/Off keys also remain active during a sequence and can be used to override a delay.

## Setting TripLink OVP/ OCP

Menu > TripLink OCP

Menu > TripLink OVP

Trip Link is a feature that allows the OVP and OCP protection trips of one output to be linked to other outputs. If a trip occurs, all linked outputs will be tripped simultaneously. TripLink OVP and TripLink OCP are set in the same way. At factory defaults, TripLink is disabled for all outputs.

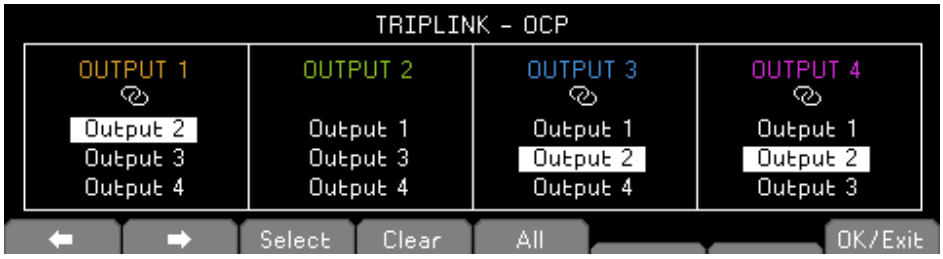


The arrow keys move the cursor left and right through the outputs, use the spin wheel to select the output to link and the soft keys can then be used to select/ deselect the Outputs to link to the leading output. Linked outputs will appear inverted (white box with black text).

Alternatively, all outputs can be linked to one another buy pressing the All key at any time. The Clear soft key will clear all selections across all outputs.

## Pass Code Locking of the Front Panel

Menu > Lock Keypad using Pass Code

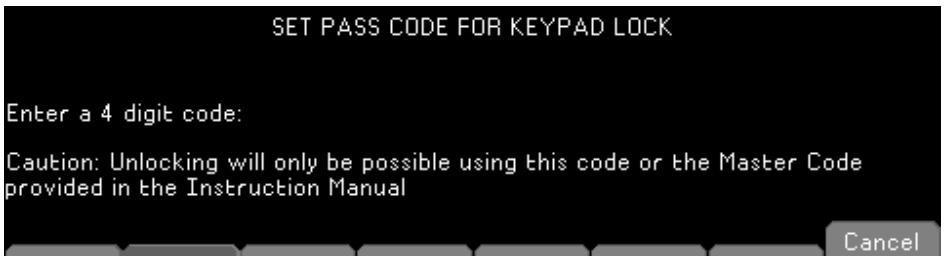


In addition to the normal locking of the front panel (see '*Instrument Overview*') it is also possible to lock the front panel securely by setting a pass code. This might be appropriate when the power supply is installed within a system where, once set up, changes must only be made by the installer.

The pass code is a "once only" code. After the system has been unlocked, the pass code is discarded, and a new code (or the same one) must be entered in order to lock it again.

**NOTE**



In the event that the user forgets the pass code, the power supply can be unlocked using the master pass code of 7835 which is always active.

## System Preferences

Menu > System Preferences

Various aspects of the power supply operation can be changed from the System Preferences function. These are detailed in '*Changing System Preferences*'.

## Setting to Factory Defaults

Menu > Factory Defaults

This function can be used to return most of the instrument settings including Voltage, Current, Range, OVP, OCP, TripLink, Output On/Off, Current Meter Averaging, Multi-On/Off Action and System Preferences back to the factory default values as listed in section *'12'*
The Store memories for both individual outputs and All Outputs are unaffected.

To clear each bank of Stores it is necessary to use the function Stores > Delete > Del All.

Remote interface settings ( P versions only) are also unaffected.

## Adjusting LCD Brightness

Menu > Adjust LCD Brightness

The LCD brightness can be adjusted over a wide range. The setting is displayed numerically as a percentage.

## Calibration

Menu > Calibration

The Calibration function enables the instrument to be re-calibrated when required.

**CAUTION**



Calibration will overwrite the existing settings and should only be carried out by qualified personnel in conjunction with the instrument Service Guide and the necessary precision equipment.

---

A 4-digit pass code can be set to prevent unauthorised calibration if required.

## Remote Control Interfaces (P versions only)

Menu > Remote Control Interfaces

Settings for the GPIB and LAN interfaces can be observed using this function. Details for the GPIB interface are within the Remote Interfaces Configuration section '*GPIB Interface* (optional)'. Details for the LAN interface are within the Remote Interfaces Configuration section *'LAN Interface'*.

### Help

Help Text

Pressing the Help soft key provides some on-screen explanation of the highlighted function.

# 7. CHANGING SYSTEM PREFERENCES

Menu > System Preferences

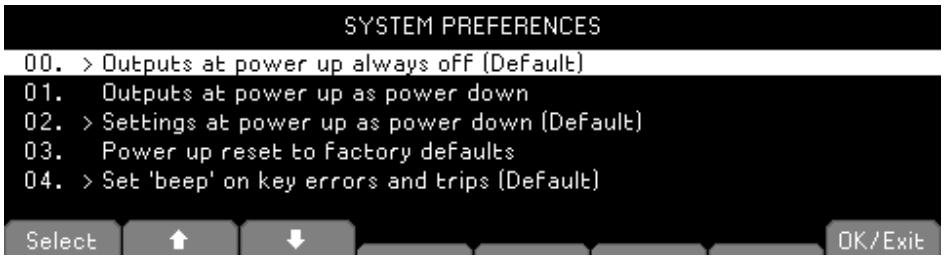


Access to System Preferences is selected from the main system menu. A list of system preferences is shown. The current system preferences are indicated by ticks against the relevant setting. Changes are made by moving the highlight with either the arrow keys or the spin wheel and pressing the Select soft key. Alternatively, a line can be selected directly by entering the two-digit number from the keypad.

## Status at Power-up

Menu > System Preferences > Outputs at power up / Settings at power up

At power-up the default behaviour is for all the outputs to be set to Off. However, the user can change this default setting such that the outputs are restored to their condition when the instrument was powered down. The default behaviour also returns the settings (set volts, set current, range etc.) to those that existed at power-down. This can be changed so that the settings are always at factory defaults (see section '12'). This includes all outputs being set to Off.

## Alert Sound (Beep)

Set beep / Disable beep

An alert sounder is incorporated that produces a "beep" under specific conditions. By default, a beep will be sounded when an illegal key entry is made, or when a trip condition occurs. This can be disabled if preferred. It is also possible for a beep to be sounded whenever an output changes into constant current (CC) mode. This is disabled by default.

## Spin wheel Function

Spin wheel function

The function of the spin wheel can be changed to reduce the speed-related increment rate. Three choices are available: normal (default), reduced acceleration, or single digit increment.

## Compatibility Mode

Menu > System Preferences > Set Compatibility mode / Disable Compatibility mode.

The MX has an added compatibility mode which allows the instrument to be set up to work with the command set of the older MX models (Black and white display), this mode requires the user to disable an output for high power usage as detailed *in 'Appendix 1:'.*

# 8. NOTES ON OPERATION

## Accuracy and Resolution

All four outputs provide good accuracy and resolution and offer remote sensing to ensure precise regulation at the load. See '*Technical Specifications*' for accuracy specifications.

On the MX100Q/P model, ranges 16V and 35V offer greater resolution and accuracy than 70V range and uses 5-digit meters to give 1mV and 0.1mA resolution (as against 10mV and 0.1mA for 70V range). Consequently, ranges 16V and 35V should be chosen to power circuits where particularly high precision is required.

## Remote Sense

Each output has a very low output impedance, but this is inevitably increased by the resistance of the connecting leads and the contact resistance between terminals and leads. At high currents this can result in significant differences between the indicated source voltage and the actual load voltage (two 20 milliohm connecting leads will drop 0.2V at 5 Amps, for example).

This problem can be minimised by using short, thick, connecting leads, but where necessary it can be completely overcome by using the remote sense capability.

This requires the sense terminals to be connected to the output at the load instead of at the source by inserting wires into the SENSE terminals and connecting them directly to the load. The switch should then be set to REMOTE instead of LOCAL.

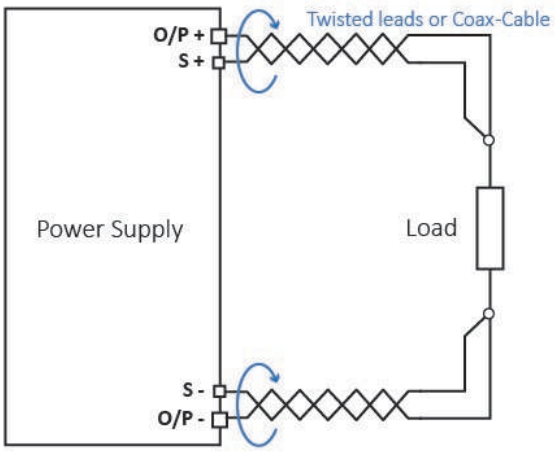


Remote Sense at point of load

To avoid instability and transient response problems, care must be taken to ensure good coupling between each output and sense lead; this can best be done by twisting the leads together. An electrolytic capacitor directly across the load connection point may also be beneficial.

The voltage drop in each output lead should not exceed 0.5 Volts. Higher voltage drops could result in small metering errors or an inability to supply full power to the load when approaching maximum voltage and current.

## Parallel Wiring of Outputs

If currents above 6 amps are required, this can be achieved by wiring two or more outputs in parallel. For example, outputs 1 and 2 could be paralleled to provide 16V/12A. In this situation it would be appropriate to use voltage tracking (Mode1 V2=V1 in this example) so that the voltage can be adjusted directly on one output. See *'Setting Voltage Tracking'* for more details.

The drawing shows a parallel connection of two outputs using local or remote sensing.

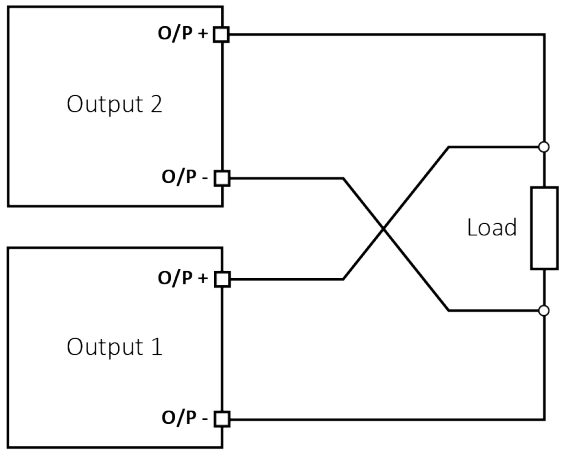


Parallel Wiring (Local Sense)

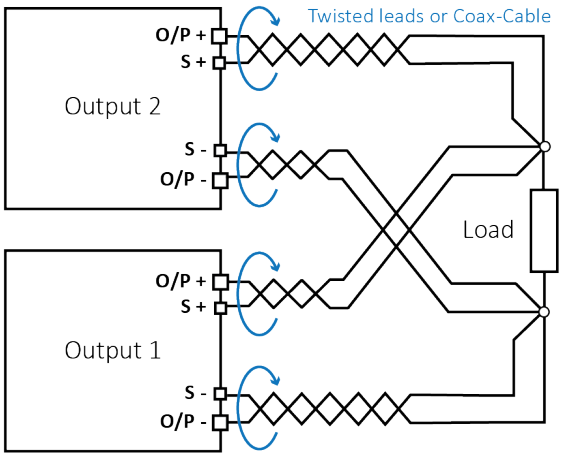


Parallel Wiring (Remote Sense)

## Series Wiring of Outputs

If voltages above 70 volts are required, this can be achieved by wiring two or more outputs in series. For example, outputs 1, 2, 3 and 4 could be series connected to provide up to 140V.

If using the MX100Q/P model, Voltages up to 140V can also be achieved by connecting outputs 3 and 4 in series and selecting voltage tracking so that full voltage adjustments can be made using one output control.

The drawing shows a series connection of two outputs using local or remote sensing.

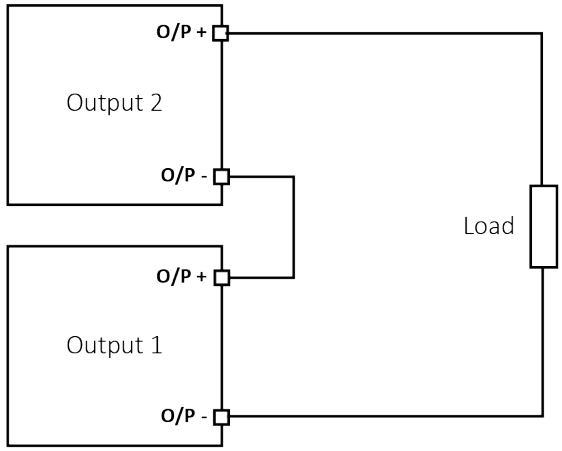


Series Wiring (Local Sense)

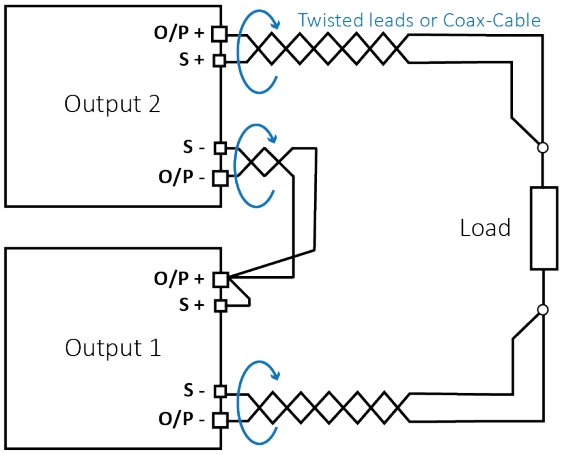


Series Wiring (Remote Sense)

**WARNING**

Voltages above 60Vdc are hazardous live according to EN 61010-1 and great care must be taken when using the power supply at voltages above this level.
Ensure that the exposed end of any wires are fully inserted and inaccessible to the touch.
Always make connections to the power supply with the outputs off.
See also 'Instrument Overview'.

## Instantaneous Current Output

The current setting control can be set to limit the continuous output current to levels down to the milliamps. However, in common with all precision bench power supplies, a capacitor is connected across the output to maintain stability and good transient response.

This capacitor charges to the output voltage and short-circuiting of the output will produce a current pulse as the capacitor discharges which is independent of the current limit setting.

## Output On/Off and Response Speed

The output On/Off control of the power supply is entirely electronic. The Off condition is achieved by setting the voltage to zero and the current level to low. There is no physical disconnection of the outputs.

When an output is turned on or off there is a delay between the key being pressed and the output voltage or current going to zero (off) or rising to the set voltage or current (on).

The delay is a function of the loop response time of the power supply and of the stability capacitor which is placed across the output terminals. This capacitance has to be charged or discharged before the output can reach the set voltage or return to zero respectively.

Because bench power supplies are used primarily in CV (constant voltage) mode, the following explanation applies to CV mode. The situation for CC mode is different.

When switching on, the output will normally rise to the set value within a fixed length of time, typically a few milliseconds (see *'Technical Specifications').*

However, this time could be increased if the current setting is very low or is very close to the current required by the load. A large external capacitance at the load could also slow down the response.

When switching off with no load, the output will normally fall back to zero within a fixed length of time (see '*Technical Specifications*'). If a load is connected the response may be quicker because of the additional discharge provided by the load. However, if the load includes a large capacitance the response may be slower.

Turn-on and turn-off speeds are particularly relevant to Multi-On/Multi-Off output sequencing (see '*Multi-On / Multi-Off Operation and Sequencing'*) where delays between the switching of different outputs can be set to a resolution of 10ms. These delays apply only to the initiation of an output being turned on or turned off, the actual delay will depend upon the actual turn-on or turn-off times applying as described above. In situations where the user needs to know the actual response speeds for specific conditions it will be necessary to observe this using an oscilloscope.

## Using OVP and OCP

OVP (over-voltage protection) monitors the voltage on the output terminals and switches the output off if it exceeds the OVP setting. The response speed is typically 100us. Control of OVP is described in '*Setting Over-Voltage and Over-Current protection*'.

OVP might be used to guard against accidental mis-setting of the power supply or might be used to identify a fault condition when operating in constant current mode. Unlike the voltage limit setting, exceeding the OVP will turn the output off in a situation where damage to the device under test might otherwise occur.

OCP (over-current protection) monitors the current flowing at the output and switches the output off if it exceeds the OCP setting. The response speed is <100ms, if TripLink is active the response speed will be <400ms. Control of OCP is described in '*Setting Over-Voltage and Over-Current protection*'.

OCP might be used to guard against accidental mis-setting of the power supply or might be used to identify a fault condition when operating in constant voltage mode. Unlike the current limit setting, exceeding the OCP will turn the output off in a situation where damage to the device under test might otherwise occur.

### OCP Trip at Output On

If the OCP level is set to a very low level whilst also being below the set current level, it is possible for a trip condition to be created when the output is switched on. This is caused by the current needed to charge the output capacitance. Whether a trip occurs is a function of the OCP trip response speed, the OCP level, the set current and the set output voltage.

## Over-temperature Trip (OTP)

The power supply has a sensor that monitors the internal ambient temperature. Should that exceed a safe level, as might occur if the ventilation input or output was blocked, an over-temperature protection trip (OTP) will occur. Should OTP occur, all four outputs will be turned off and an OTP message will appear on the screen. Normal operation can only be restored by turning the AC supply (Power) off, rectifying the ventilation problem and allowing the unit to cool before switching back on.

Also, each output module has a temperature sensor which can shut down only the affected output and display an OTP message. In this case it is possible to attempt to clear the trip condition without requiring a power cycle using the Reset soft key. If the OTP message continues to be displayed after allowing the module to cool this may be an indication of a hardware fault.

In addition, there is a temperature sensor on the power device of the PFC (power factor correction) stage. If this detects an over-temperature problem, all power outputs will shut down; the auxiliary supply for the CPU and display will, however, remain active, and the 'Hardware Failure or Over-temperature' message screen will be displayed. If poor ventilation is suspected, correct the problem, allow the instrument to cool, and use the Reset soft key to re-initialise the instrument. However, if the 'Hardware Failure or Over-temperature' message screen continues to be displayed after the instrument has cooled and been restarted, there may be a component fault; if in doubt, the unit should be returned for service.

# 9. REMOTE INTERFACE OPERATION (MX-P VERSIONS ONLY)

## Remote Interface Configuration

The MX100QP and MX103QP models can be remotely controlled via its USB, LAN, RS232 or GPIB (Optional).

The USB interface enumerates as a Communications Class device and interacts with application software through a standard virtual COM port device driver on the PC. The instrument firmware can be updated in the field via the USB port; see '*Maintenance'* for more details .

The LAN interface is designed to meet LXI (Lan eXtensions for Instrumentation) version 1.5 LXI Core 2016. Remote control using the LAN interface is possible using the TCP/IP Sockets protocol. The instrument also contains a basic Web server which provides information on the unit and allows it to be configured from a web browser. Simple command line control from the browser is also possible.

The RS232 interface communicates directly with a standard COM port.

The GPIB interface provides full facilities as described in IEEE Std. 488 parts 1 and 2.

### GPIB Interface (optional)

The standard GPIB interface 24-way connector is located on the instrument rear panel. The pin connections are as specified in IEEE Std. 488.1-1987 and the instrument complies with both IEEE Std. 488.1-1987 and IEEE Std. 488.2-1987.

It provides full talker, listener, service request, serial poll and parallel poll capabilities. There are no device trigger or controller capabilities. The IEEE Std.488.1 interface subsets provided are:

SH1, AH1, T6, L4, SR1, RL2, PP1, DC1, DT0, C0, E2.

The GPIB address of the unit is set from the system menu:

Settings can be changed from the System Menu (Menu > Remote Control Interfaces). The present GPIB address is displayed. To change the address, use the spin wheel to set the desired address and then press the OK/Exit soft key.

The interface will operate with any commercial GPIB interface card, using the device drivers and support software provided by the manufacturer of that card.

## RS232 Interface

The 9-way D-type serial interface connector is located on the instrument rear panel. It should be connected to a standard PC port preferably using a fully wired 9 way 1:1 male-female cable without any cross-over connections. Alternatively, a 3-way cable can be used, connecting only pins 2, 3 and 5 to the PC, but with links made in the connector at the PC end between pins 1, 4 and 6 and between pins 7 and 8, as shown in the diagram:

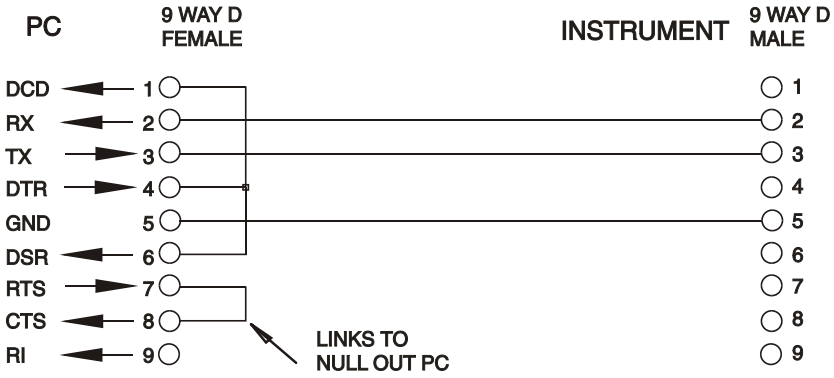


Most commercial cables provide these connections.

In addition to the transmit and receive data lines, the instrument passively asserts pins 1 (DCD) and 6 (DSR), actively drives pin 8 (CTS) and monitors pin 4 (DTR) from the PC. This allows the use of a fully wired 9-way cable.

The Baud Rate for this instrument is fixed at 9600; the other parameters are 8 data bits, no parity and one stop bit. Flow control uses the XON/XOFF protocol, but because of the low volume of data associated with this instrument it is very unlikely that flow control will actually be invoked.

## USB Interface and Device Driver Installation

The instrument firmware can be updated in the field through the USB port. This does not need the driver described here. It requires a PC software utility provided by the manufacturer and uses a HID driver that will already be installed on the PC. If that is the only USB functionality required, download the package containing the firmware update together with the PC utility from the manufacturer, and follow the instructions included.

Using the USB interface for remote control requires a Communications Device Class driver on the PC to provide a virtual COM port instance. In Windows a suitable driver is provided by Microsoft, but it is not installed by default. The data (.INF) file to control the installation is provided on the Product Documentation CD delivered with the unit; however, the same driver is also used by many other instruments from this manufacturer and may already be known to the PC.

To install the driver for the first time, first switch the unit on, and then connect the USB port to the PC. The Windows plug and play functions should automatically recognise the attachment of new hardware to the USB interface and (possibly after searching the internet for some time) prompt for the location of a suitable driver. Follow the Windows prompts and point to the CD, then the sub-directory for this product, and then to the USB Driver sub-directory below that. The file is named USB_ARM_VCP_xxx.INF, where xxx is a version number. (A readme.pdf file will also be found in that directory if further assistance is needed.)

In some cases, Windows will not complete this procedure (especially recent versions which search the internet first, looking for the unique Vendor ID and Product ID), in which case the instrument will show in Device Manager as “not working properly”.

If this happens, select this device, right click and choose “update driver software...” and then “browse this computer for driver software...” and then locate the .INF file on the CD as described above.

Once Windows has installed the device driver it will assign a COM port number to this particular unit. This number will depend on previous COM port assignments on this PC, and it may be necessary to use Device Manager to discover it. Each instrument has a unique USB identifier which is remembered by the system, so it will receive the same COM port number whenever it is attached to the same PC (regardless of the physical interface socket used), even though the COM port will disappear while the instrument is disconnected or switched off. Other instruments will receive different COM port numbers.

Note that a different PC will not necessarily assign the same COM port number to a particular instrument (it depends on the history of installations), however Device Manager can be used to change the assignments given.

This virtual COM port can be driven by Windows applications (including a terminal emulator) in exactly the same way as any standard COM port, except that the Baud rate and other settings are unnecessary and are ignored. Some old applications might not function with COM port numbers 3 or 4, or above 9. In this case, use Device Manager to change the allocation given. Once it is installed, the driver will be maintained by Windows Update in the usual way.

## LAN Interface

The LAN interface is designed to comply with the LXI standard version 1. LXI Core 2016 and contains the interfaces and protocols described below. For more information on LXI standards refer to www.lxistandard.org.

When powered up and attached to a network, the unit will by default attempt to obtain IP address and netmask settings via DHCP, or, if DHCP times out (after 30 seconds), via Auto-IP. In the very unlikely event that an Auto-IP address cannot be found a static IP address is assigned; the default is 192.168.0.100, but this can be changed on the web page. Connecting via a router is recommended as this is significantly quicker to assign an IP address; connecting directly to a PC will only begin to assign an Auto-IP address after the 30 second DHCP timeout.

Since it is possible to misconfigure the LAN interface, making it impossible to communicate with the instrument over LAN, a LAN Configuration Initialise (LCI) mechanism is provided via a push switch (marked LAN RESET) accessible through a small hole in the rear panel. This restores the default configuration with DHCP enabled, so the unit will then follow the sequence described in the previous paragraph. Note that resetting the LAN interface removes any password protection.

The progress of establishing a LAN connection can be viewed either by inspecting the Remote-Control Interfaces screen (Menu > Remote Control Interfaces) or by interpreting the symbol shown on the status line of the Home screen, which has four possible indications:

| | | |
|---|---|---|
| No LAN |  | The unit cannot detect any connection to a LAN, e.g., the cable is unplugged. |
| Configuring |  | The unit has detected a LAN connection but is not yet configured, e.g., is waiting for DHCP. |
| LAN OK |  | The LAN connection is now configured, and the unit can communicate. |
| LAN FAULT |  | The unit has detected a problem with LAN connection, Communication is not possible e.g. Its IP address is in use by another device. |

## LAN IP Address and Hostname

To communicate with the instrument through the LAN interface, the IP address (which was allocated during the connection procedure described above) must be known. Once connected and correctly configured, the IP address of the unit is displayed within the Remote-Control Interfaces screen (Menu > Remote Control Interfaces). Alternatively, the address can be obtained from the DHCP server, or by using the LXI Discovery Tool described below.

### mDNS and DNS-SD Support

The instrument supports these multicast name resolution protocols, which allow a meaningful host name to be assigned to the unit without needing an entry in the database of a central nameserver. The desired hostname can be entered on the webpage (which will have to be accessed by IP address the first time); spaces are not allowed. The name then appears in the .local domain (e.g., myMX100.local), if the accessing device is configured to support the protocol (which is the case with most modern PCs). The default name is followed by the serial number.

### ICMP Ping Server

The unit contains an ICMP server allowing the instrument to be ‘pinged’ using its IP address as a basic communication check, or by its host name if name resolution is working.

## Web Server and Configuration Password Protection

The unit contains a basic web server. This provides information on the instrument and allows it to be configured. The Configure and Instrument Control pages can be password protected to deter unauthorised changes to the remote operation configuration; the default configuration is ‘no password’. The Configure page itself explains how to set the password. The password can be up to 15 characters long; note that the Username should be left blank. The password and hostname will, however, be reset to the default (no password) if the rear panel LAN reset switch is used to reset all the LAN parameters to their factory default.

### LAN Identify

The instrument's main web page has an 'Identify' function which allows the user to send a command to the instrument which causes its display to flash until the command is cancelled.

### LXI Discovery Tool

This tool can be used to display the IP addresses and other associated information of all connected devices that comply with the VXI-11 discovery protocol. It is a Windows PC application, which is provided on the supplied CD ROM that can be installed and run on the controlling PC, with the unit either connected directly to the PC network connector or via a router. Double clicking on any entry in the list of discovered devices will open the PC's web browser and display the home page of that device. For a later version of the tool that supports discovery by both VXI-11 and mDNS visit www.lxistandard.org . There are also tools for LAN discovery included as part of the National Instruments Measurement and Automation Explorer package and the Agilent Vee application.

### VXI-11 Discovery Protocol

The instrument has very limited support of VXI-11 which is sufficient for the discovery protocol and no more.

It implements a Sun RPC Port-mapper on TCP port 111 and UDP port 111 as defined in RFC1183. The calls supported are:

NULL, GET PORT and DUMP.

On TCP port 1024 a very simple VXI-11 protocol is implemented, sufficient only for instrument discovery. This implements the following calls:

CREATE LINK, DEVICE_WRITE, DEVICE_READ and DESTROY_LINK.

Once a link has been created anything written to the device is ignored and any attempt to read from the device returns the same identification string as the *IDN? query.

### VISA Resource Name

Because of the limited support for VXI-11 (Discovery Protocol only), the instrument must be referred to by its raw socket information when used with software packages which communicate using a VISA resource name. For example, an instrument at IP address 192.168.0.100 would normally have a VISA resource name of "TCPIP0::192.168.0.100::inst0::INSTR" but for this instrument the name must be modified to read "TCPIP0::192.168.0.100::9221::SOCKET" where 9221 is the TCP port used by this instrument for control and monitoring, see below.

XML Identification Document URL

As required by the LXI standard, the instrument provides an XML identification document that can be queried via a GET at "http://IPaddress:80/lxi/identification" that conforms to the LXI XSD Schema (available at http://www.lxistandard.org/InstrumentIdentification/1.0 ) and the W3C XML Schema Standards ( http://www.w3.org/XML/Schema ). This document describes the instrument. The hostname can be used instead of the IP address if name resolution is working.

### TCP Sockets

The instrument uses 1 socket on TCP port 9221 for instrument control and monitoring. Text commands are sent to this port as defined in 'Remote Commands' and any replies are returned via the same port. Any command string must contain one or more complete commands. Multiple commands may be separated with either semicolons **";"** or line feeds. No final terminator is required, since the TCP frame implies a terminator, but one may be sent if desired.

### Interface Locking

All the remote interfaces are live at all times, to remove any need to select the active interface and to ensure that the LAN interface is always available (as demanded by the LXI standard). To reduce the risk of the instrument being inadvertently under the control of two interfaces at once a simple lock and release mechanism is provided in the instruction set. The lock is automatically released where it is possible to detect disconnection, or when the Local key is pressed. Access to the interfaces may also be restricted using the web pages.

Any interface may request to have exclusive control of the instrument by sending an "IFLOCK 1" command. The lock may only be released by sending an "IFLOCK 0" command from the interface instance that currently has the lock and may be queried from any interface by sending an "IFLOCK?" command. The reply to this query will be "-1" if the lock is owned by another interface instance, "0" if the interface is free and "1" if the lock is owned by the requesting interface instance. Sending any command from an interface without control privileges that attempts to change the instrument status will set bit 4 of the Standard Event Status Register and put 200 into the Execution Error Register to indicate that there are not sufficient privileges for the required action.

**NOTE**



it is also possible to configure the privileges for a particular interface to either 'read only' or 'no access' from the Web page interface.

### Status Reporting

The standard status and error reporting model described in IEEE Std. 488.2 was designed for the GPIB interface and contains some features intended for use with the Service Request and Parallel Poll hardware capabilities of that interface, and to accommodate its semi-duplex operation. Although those facilities are of little use with other interfaces, this instrument makes the full set of capabilities available to all of the interfaces. A separate set of many of the status and error registers is maintained for each potential interface instance. The GPIB, USB and RS232 interfaces each provide a single instance, while the LAN interface provides two: one for the Web page and one for the TCP socket interface.

Having a separate status model for each interface instance ensures that data does not get lost, as some status query commands (e.g., '*ESR?') clear the contents of a register after reading the present value.

The full set of error and status registers and the individual bits they contain is shown in the Status Model Diagram and described in detail below, but in brief the status is maintained using five primary registers, the Limit Event Status Register for each output, the Standard Event Status Register and the Execution Error Register. A summary is reported in the Status Byte Register, as selected by four masking registers, the Limit Status Enable Register for each output and the Standard Event Status Enable Register. Two further mask registers, the Service Request Enable register and the Parallel Poll Response Enable register, control operation of the GPIB hardware Service Request and Parallel Poll (and the associated ist message) respectively. It is recommended that, when controlling the unit through any interface other than GPIB, the controller program should simply read the primary status registers directly.

The Standard Event Status Register, supported by the Execution Error and Query Error registers, records events concerned with command parsing and execution, and the flow of commands, queries and responses across the interface. These are mainly of use during software development, as a production test procedure should never generate any of these errors.

### Limit Event Status and Limit Event Status Enable Registers

This pair of registers are implemented for each output as an addition to the IEEE Std.488.2. Their purpose is to inform the controller of entry to and/or exit from current or voltage limit conditions and the history of protection trip conditions since the last read.

Any bits set in the Limit Event Status Register (LSR<N>) which correspond to bits set in the Limit Event Status Enable Register (LSE<N>) will cause the LIM<N> bit to be set in the Status Byte Register, where <N> is 1 for output 1, 2 for output 2, 3 for output 3 and 4 for output 4.

The Limit Event Status Register is read and cleared by the LSR<N>? command. The Limit Event Status Enable Register is set by the LSE<N> <NRF> command and read by the LSE<N>? command.

Bit 7- Reserved for future use

Bit 6- Set when a fault trip has occurred which requires AC power OFF/ON to reset.

Bit 5- Set when TripLink is activated

Bit 4- Set when an output over temperature trip has occurred

Bit 3- Set when an output over current trip has occurred

Bit 2- Set when an output over voltage trip has occurred

Bit 1- Set when output enters current limit (constant current mode)

Bit 0- Set when output enters voltage limit (constant voltage mode)

### Standard Event Status Registers (ESR and ESE)

The Standard Event Status Register is defined by the IEEE Std. 488.2 GPIB standard. It is a bit field, where each bit is independent and has the following significance:

Bit 7 **Power On.** Set when power is first applied to the instrument.

Bits 6 & 1: Not used, permanently 0.

Bit 5 **Command Error.** Set when a syntax error is detected in a command or parameter. The parser is reset, and parsing continues at the next byte in the input stream.

Bit 4 **Execution Error.** Set when a non-zero value is written to the Execution Error register, if a syntactically correct command cannot be executed for any reason.

Bit 3 **Verify Timeout Error.** Set when a parameter is set with 'verify' specified and the value is not reached within 5 secs, e.g., output voltage is slowed by a large capacitor on the output.

Bit 2 **Query Error.** Set when a query error occurs, because the controller has not issued commands and read response messages in the correct sequence.

Bit 0 **Operation Complete.** Set in response to the '*OPC' command.

The Standard Event Status Register is read and cleared by the *ESR? query, which returns a decimal number corresponding to the contents. On power-up it is set to 128, to report the power on bit.

The Standard Event Status Enable Register provides a mask between the Event Status Register and the Status Byte Register. If any bit becomes '1' in both registers, then the ESB bit will be set in the Status Byte Register. This enable register is set by the *ESE <NRF> command to a value 0- 255 and read back by the *ESE? query (which will always return the value last set by the controller). On power-up it is set to 0.

### Execution Error Register (EER)

This instrument specific register contains a number representing the last command processing error encountered over this interface. The error numbers have the following meaning:

**0** No error has occurred since this register was last read.

**100** **Numeric Error:** the parameter value sent was outside the permitted range for the command in the present circumstances.

**102** **Recall Error:** a recall of set up data has been requested but the store specified does not contain any data.

**103** **Command Invalid:** the command is recognised but is not valid in the current circumstances. Typical examples would by trying to change V2 directly while the outputs are in voltage tracking mode with V1 as the master.

**200** **Access Denied:** an attempt was made to change the instrument's settings from an interface which is locked out of write privileges by a lock held by another interface. The Execution Error Register is read and cleared using the 'EER?' command. On power up this register is set to 0 for all interface instances.

There is no corresponding mask register: if any of these errors occurs, then bit 4 of the Standard Event Status Register will be set. This bit can be masked from any further consequences by clearing bit 4 of the Standard Event Status Enable Register.

Status Byte Register (STB) and GPIB Service Request Enable Register (SRE)

These two registers are implemented as required by the IEEE Std. 488.2.
Any bits set in the Status Byte Register which correspond to bits set in the Service Request Enable Register will cause the RQS/MSS bit to be set in the Status Byte Register, thus generating a Service Request on the bus.

The Status Byte Register is read either by the *STB? query, which will return MSS in bit 6, or by a Serial Poll which will return RQS in bit 6. The Service Request Enable register is set by the *SRE <NRF> command and read by the *SRE? Query.

Bits 7 & 3 : Not used, permanently 0.

MSS/RQS. This bit (as defined by IEEE Std. 488.2) contains alternatively the Master Status Summary message returned in response to the *STB? query, or the Requesting Service message returned in response to a Serial Poll.
The RQS message is cleared when polled, but the MSS bit remains set for as long as the condition is true.
ESB. The Event Status Bit. This bit is set if any bits set in the Standard Event Status Register correspond to bits set in the Standard Event Status Enable Register.

MAV. The Message Available Bit. This will be set when the instrument has a response message formatted and ready to send to the controller.
The bit will be cleared after the Response Message Terminator has been sent.

LIM4. The Output4 Limit Status Bit. This will be set if any bits in the Limit Event Status register for output4 are set and corresponding bits are set in the Limit Event Status Enable register LSE4.

LIM3. The Output3 Limit Status Bit. This will be set if any bits in the Limit Event Status register for output3 are set and corresponding bits are set in the Limit Event Status Enable register LSE3.

LIM2. The Output2 Limit Status Bit. This will be set if any bits in the Limit Event Status register for output2 are set and corresponding bits are set in the Limit Event Status Enable register LSE2.

LIM1. The Output1 Limit Status Bit. This will be set if any bits in the Limit Event Status register for output1 are set and corresponding bits are set in the Limit Event Status Enable register LSE1.

GPIB Parallel Poll (PRE)

Complete Parallel Poll capabilities are offered by this instrument as defined in IEEE Std. 488.1. The Parallel Poll Enable Register (which is set by the *PRE <NRF> command and read by the *PRE? query) specifies which bits in the Status Byte Register are to be used to form the ist local message. If any bit is '1' in both the STB and the PRE then ist is '1', otherwise it is '0'. The state of the ist message can also be read directly by the *IST? query.

The physical layer protocol of the Parallel Poll (determining which data line is to be driven and its logic sense) is configured by the PPC and PPE commands and released by the PPU

and PPD commands in the manner defined by the standard. The instrument implements passive pull-up on the DIO lines during Parallel Poll.

### Query Error Register- GPIB IEEE Std. 488.2 Error Handling

These errors are much more likely to occur on the semi-duplex GPIB interface, which requires the instrument to hold a response until addressed to talk by the controller. All the other interfaces provide full duplex communication, with buffering in the physical layer which will usually hold a response from the instrument until the controlling software reads it; there is no equivalent of the GPIB state 'addressed to talk', so the instrument is not aware of the actions of the controller.

The IEEE 488.2 UNTERMINATED error arises if the instrument is addressed to talk and has nothing to say, because the response formatter is inactive, and the input queue is empty. This will cause the Query Error bit to be set in the Standard Event Status Register, a value of 3 to be placed in the Query Error Register and the parser to be reset.

The IEEE 488.2 DEADLOCK error arises if the response formatter is waiting to send a response message and the input queue becomes full. This will cause the Query Error bit to be set in the Standard Event Status Register, a value of 2 to be placed in the Query Error Register and the response formatter to be reset, discarding the waiting response message. The parser will then start parsing the next <PROGRAM MESSAGE UNIT> from the input queue.

The IEEE 488.2 INTERRUPTED error arises if the response formatter is waiting to send a response message and a <PROGRAM MESSAGE TERMINATOR> has been read by the parser, or the input queue contains more than one END message. This will cause the Query Error bit to be set in the Standard Event Status Register, a value of 1 to be placed in the Query Error Register and the response formatter to be reset, discarding the waiting response message. The parser will then start parsing the next <PROGRAM MESSAGE UNIT> from the input queue.

### Power on Settings

The following instrument status values are set at power on:

| | | |
|---|---|---|
| EER | Execution Error Register | = 0 |
| ESR | Standard Event Status Register | = 128 (Power on bit set) |
| QER | Query Error Register † | = 0 |
| ESE | Standard Event Status Enable Register † | = 0 |
| STB | Status Byte Register | = 0 |
| SRE | Service Request Enable Register † | = 0 |
| PRE | Parallel Poll Response Enable Register † | = 0 |
| †Registers marked thus are normally only used through the GPIB interface. | | |

The instrument will be in local state with the keyboard active. By default, the instrument settings at power on are the same as at the last switch off and the outputs are off. These parameters may be configured by the user to allow outputs to be the same as at the last switch off or, alternatively, all settings and outputs may be reset to factory defaults at power on, see *'Default Values'*.

### Register Summary

| Set | Query | Name |
|---|---|---|
| | LSR1?, LSR2?, LSR3?,LSR4? | Limit Status Registers |
| LSE1, LSE2, LSE3, LSE4 | LSE1?, LSE2?, LSE3?, LSE4? | Limit Status Enable Registers |
| † | EER? | Execution Error Register |
| † | QER? | Query Error Register |
| † | *ESR? | Standard Event Status Register |
| *ESE | *ESE? | Standard Event Status Enable Register |
| | *STB? | Status Byte Register |
| *SRE | *SRE? | Status Byte Enable Register |
| *PRE | *PRE? | Parallel Poll Response Enable Register |

† These registers are cleared after being queried, or by the *CLS command.

Status Model

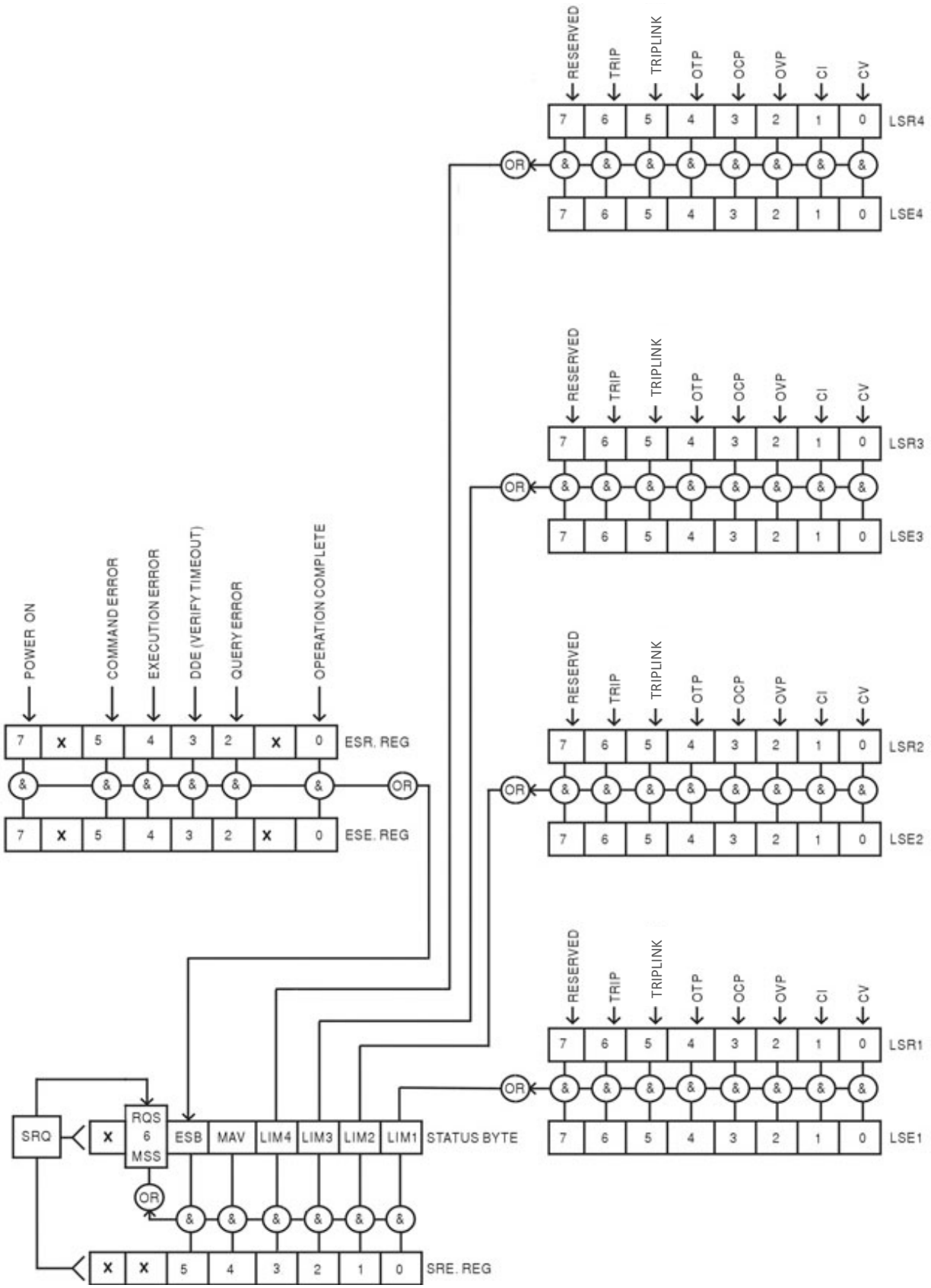

# 10. REMOTE COMMANDS (MX- P VERSIONS ONLY)

## General

### Remote and Local Operation

At power-on the instrument will be in the local state, with normal keyboard operation possible. All remote interfaces are active and listening for a remote command. When any command is received from any interface the instrument will enter the remote state. In this state the keyboard is locked out, the display switches to the home screen, with REM displayed in the upper right corner. The instrument may be returned to the local state by pressing the LOCAL key; however the remote state will be immediately re-entered if the instrument is addressed again or receives another command from any interface. It is the responsibility of the user to avoid any conflict if parameters are changed from the front panel while in the local state.

### Remote Command Handling

Each remote control interface has a separate input queue which is filled, under interrupt, in a manner transparent to all other instrument operations. The RS232 interface implements flow control by sending XOFF when the queue contains approximately 200 characters, and then XON when about 100 free spaces become available. All the other interfaces have standard automatic flow control mechanisms built into their physical layer communication protocol.

Commands are taken from the input queues by the parser as available. Commands and queries from each queue are executed in order, but the order of execution of commands from different interfaces is not defined and should not be relied upon. It is strongly recommended that use should be made of the interface locking facilities described above. The parser will not start a new command until any previous command or query is complete. Responses are sent to the interface which issued the query. There is no internal output queue, so on the GPIB interface the response formatter will wait, indefinitely if necessary, until the complete response message has been read by the controller, before the parser is allowed to start the next command in the input queue. On all other interfaces the response message is immediately sent into buffers in the physical layer.

### Remote Command Formats

Commands are sent as <PROGRAM MESSAGES> by the controller, each consisting of zero or more <PROGRAM MESSAGE UNIT> elements, separated (if there is more than one such element) by <PROGRAM MESSAGE UNIT SEPARATOR> elements, and finally a <PROGRAM MESSAGE TERMINATOR>.

The <PROGRAM MESSAGE UNIT SEPARATOR> is the semi-colon character ';' (3BH).

The <PROGRAM MESSAGE TERMINATOR>, which separates or terminates <PROGRAM MESSAGES>, is the new line character (0AH), but in the case of the GPIB interface the hardware END message may also be used, either with the last character of the message or with the new line. In the case of the LAN interface, commands may not be split across TCP/IP packet boundaries.

A <PROGRAM MESSAGE UNIT> is any of the commands in the remote commands list, which must be sent in full as specified. A command must be separated from any parameters by <WHITE SPACE> (which is defined as the character codes 00H to 20H inclusive, excluding the new line character 0AH). No <WHITE SPACE> is permitted within any command identifier or

parameter, but any other additional <WHITE SPACE> is ignored. Note that the Backspace character (07H) is treated as <WHITE SPACE>, so it cannot be used to delete incorrect characters, and will not hide the error.

The high bit of all characters is ignored and all commands are case insensitive. Commands that require a numeric a parameter accept the free form <NRF> format; text parameters must be sent as Character Program Data <CPD> as specified.

<NRF> numbers must be in basic units, may have a decimal point and fractional part, and can include an exponent part if helpful. They are rounded to the precision supported by the instrument.

### Command Timing

There are no dependent parameters, coupled parameters, overlapping commands, expression program data elements or compound command program headers.

All commands are separate and sequential, and are executed when parsed and immediately considered complete. To provide useful functionality, the Operation Complete bit (bit 0) in the Standard Event Status Register is only ever set by the *OPC command. Either the *OPC command or the *OPC? query can be used for device synchronisation due to the sequential nature of remote operations.

### Response Formats

Responses from the instrument to the controller are sent as <RESPONSE MESSAGES>, which consist of one <RESPONSE MESSAGE UNIT> followed by a <RESPONSE MESSAGE TERMINATOR>, which is the carriage return character (0DH) followed by the new line character (0AH) with, in the case of GPIB only, the END message NL^END. This is shown as <RMT> in the descriptions below.

Each query produces a specific <RESPONSE MESSAGE> which is described in the entry for the query command in the remote commands list below. Most responses consist of a keyword followed by either text or a number in one of the following formats:

| | |
|---|---|
| <NR1> | An integer without a decimal point or a unit. |
| <NR2> | A fixed point number with a fractional part but no exponent part. |
| <NR3> | A floating point number with both a fractional part and an exponent part. |
| <CRD> | Character Response Data, consisting of the text characters listed. |
| <N> | The number of the output or status register to which the command relates. |

## Command List

This section lists all the commands and queries implemented in this instrument. All numeric parameters are shown as <NRF> and may be sent as <NR1>, <NR2> or <NR3> as described above. Command parameters (unlike responses) are not followed by a units indication.

# 10 - Remote Commands (MX- P versions only)

## Instrument Function Commands

| | |
|---|---|
| V<n> <nrf> | Set output <N> to <NRF> Volts. |
| V<n>V <nrf> | Set output <N> to <NRF> Volts with verify. |
| OVP<n> <nrf> | Set output <N> over voltage protection trip point to <NRF> Volts. |
| OVP<n> <cpd> | Enables or disables the over voltage protection trip point where <CPD> can be ON or OFF. |
| I<n> <nrf> | Set output <N> current limit to <NRF> Amps. |
| OCP<n> <nrf> | Set output <N> over current protection trip point to <NRF> Amps. |
| OCP<n> <cpd> | Enables or disables the over current protection trip point where <CPD> can be ON or OFF. |
| DAMPING<N> <CPD> | Set the current meter measurement averaging of output <N> to <CPD>, where <CPD> can be ON, OFF, LOW, MED or HIGH. |
| V<n>? | Return the set voltage of output <N>.<br>Response is V<N> <NR2><RMT> where <NR2> is in Volts. |
| I<n>? | Return the set current limit of output <N>.<br>Response is I<N> <NR2><RMT> where <NR2> is in Amps. |
| OVP<N>? | Return the voltage trip setting of output <N>.<br>Response is VP<N> <NR2><RMT> where <NR2> is in Volts.<br>Note: If over voltage protection has been disabled the response is VP<N> <CRD><RMT> where <CRD> is OFF. |
| OCP<N>? | Return the current trip setting of output<N>.<br>Response is CP<N> <NR2><RMT> where <NR2> is in Amps.<br>Note: If over current protection has been disabled the response is CP<N> <CRD><RMT> where <CRD> is OFF. |
| V<N>O? | Return the output readback voltage of output <N><br>Response is <NR2>V<RMT> where <NR2> is in Volts. |
| I<N>O? | Return the output readback current of output <N><br>Response is <NR2>A<RMT> where <NR2> is in Amps. |
| DELTAV<n> <nrf> | Set the output voltage step size of output <N> to <NRF> Volts. |
| DELTAI<n> <nrf> | Set the output current step size of output <N> to <NRF> Amps. |
| DELTAV<N>? | Return the output voltage step size of output <N><br>Response is DELTAV<N> <NR2><RMT>, where <NR2> is in Volts. |
| DELTAI<N>? | Return the output current step size of output <N><br>Response is DELTAI<N> <NR2><RMT>, where <NR2> is in Amps. |
| INCV<N> | Increment the output<N> voltage by step size. |
| INCV<N>V | Increment the output<N> voltage by step size, with verify. |
| DECV<N> | Decrement the output<N> voltage by step size. |
| DECV<N>V | Decrement output<N> voltage by step size, with verify. |
| INCI<N> | Increment the output<N> current limit by step size. |
| DECI<N> | Decrement the output<N> current limit by step size. |
| OP<n> <nrf> | Set output<N> on/off where <NRF> has the following meaning: 0=OFF, 1=ON. |
| OP<N>? | Returns output<N> on/off status.<br>The response is <NR1><RMT> where 1 = ON, 0 = OFF. |
| OPALL <NRF> | By default, simultaneously sets all outputs on/off where <NRF> has the following meaning: 0=ALL OFF, 1=ALL ON. However, this behaviour can be changed to turn the outputs on or off in a timed sequence or to omit an output entirely. See section 0 for an explanation. |
| TRIPRST | Attempt to clear all trip conditions. |

## 10 - Remote Commands (MX- P versions only)

| | |
|---|---|
| VRANGE<n> <nrf> | Set output<N> voltage range to <NRF> where <NRF> has the following meaning:<br>Output1: 0= Disable, 1= 35V/3A, 2 = 16V/6A, 3 = 35V/6A.<br>Output2: 0= Disable, 1= 35V/3A, 2 = 16V/6A, 3 = 35V/6A.<br>Output3: 0= Disable, 1= 35V/3A, 2 = 70V/1.5A, 3 = 70V/3A.<br>Output4: 0= Disable, 1= 35V/3A, 2 = 70V/1.5A, 3 = 70V/3A. |
| VRANGE<N>? | Returns the voltage range for output<N>. The response is <NR1><RMT> where <NR1> has the following meaning:<br>Output1: 0= Disable, 1= 35V/3A, 2 = 16V/6A, 3 = 35V/6A.<br>Output2: 0= Disable, 1= 35V/3A, 2 = 16V/6A, 3 = 35V/6A.<br>Output3: 0= Disable, 1= 35V/3A, 2 = 70V/1.5A, 3 = 70V/3A.<br>Output4: 0= Disable, 1= 35V/3A, 2 = 70V/1.5A, 3 = 70V/3A. |
| CONFIG <NRF> | Sets the voltage tracking mode of the unit to <NRF> where <NRF> has the following meaning:<br>0 = None.<br>1 = Mode1.<br>2 = Mode2.<br>3 = Mode3.<br>These modes are as defined within the Setting Voltage Tracking section of this manual – see section 0. |
| CONFIG? | Returns the voltage tracking mode of the unit. The response is <NR1><RMT>, where <NR1> has the following meaning:<br>0 = None.<br>1 = Mode1.<br>2 = Mode2.<br>3 = Mode3.<br>These modes are as defined within the Setting Voltage Tracking section of this manual – see section 0. |
| ONDELAY<N> <NRF> | Set output<N> Multi-On delay where <NRF> is in milliseconds |
| OFFDELAY<N> <NRF> | Set output<N> Multi-Off delay where <NRF> is in milliseconds |
| ONACTION<N> <CPD> | Set output<N> Multi-On action where <CPD> can be QUICK, NEVER or DELAY. |
| OFFACTION<N> <CPD> | Set output<N> Multi-Off action where <CPD> can be QUICK, NEVER or DELAY. |
| SAV<n> <nrf> | Save the current settings of output<N> to the store specified by <NRF> where <NRF> can be 0-49. |
| RCL<n> <nrf> | Recall the settings for output<N> from the store specified by <NRF><br>where <NRF> can be 0-49. |
| MAXV<N>? | Returns the maximum settable voltage for output <N>. |
| MAXI<N>? | Returns the maximum settable current limit for output <N>. |
| OCPLINK<N1> <N2> | Set the output(s) to be OCP tripped <N2>via triplink for output <N1>. It isn't valid to link a channel to itself. |
| OVPLINK<N1> <N2> | Set the output(s) to be OVP tripped <N2> via triplink for output <N1>. It isn't valid to link a channel to itself. |
| OCPLINKALL | Set all outputs to OCP trip via triplink |
| OVPLINKALL | Set all outputs to OVP trip via triplink |
| OCPLINKCLR | Clear all OCP triplink settings |
| OVPLINKCLR | Clear all OVP triplink settings |

# 10 - Remote Commands (MX- P versions only)

## Common Commands

| | |
|---|---|
| *IDN? | Returns the instrument identification.<br>The response is in the form <NAME>, <model>, <serial>, <version><RMT> where <NAME> is the manufacturer's name, <model> is the instrument type, <serial> is the interface serial number and <version> is the revision level of the firmware installed. |
| *RST | Resets the functional parameters of the instrument to the default settings as listed in the Factory Default Settings, see section '12'<br>Does not affect the contents of the Save and Recall stores.<br>Does not affect any remote interface settings. |
| *SAV <NRF> | Save the settings for all four outputs simultaneously to the store specified by <NRF> where <NRF> can be 0-49. This includes output On/Off state, current meter averaging state, and the Multi-On/Multi-Off settings. |
| *RCL <NRF> | Recall the settings for all four outputs simultaneously from the store specified by <NRF> where <NRF> can be 0-49. This includes output On/Off state, current meter averaging state, and the Multi-On/Multi-Off settings. |
| *OPC | Sets the Operation Complete bit (bit 0) in the Standard Event Status Register. This will happen immediately the command is executed because of the sequential nature of all operations. |
| *OPC? | Query Operation Complete status.<br>The response is always 1<RMT> and is available immediately the command is executed because all commands are sequential. |
| *WAI | Wait for Operation Complete true.<br>This command does nothing because all operations are sequential. |
| *TST? | The product has no self-test capability and the response is always 0<RMT>. |
| *TRG | The product has no trigger capability. The command is ignored in this instrument. |

## Status Commands

| | |
|---|---|
| *CLS | Clear Status. Clears all status indications, including the Status Byte.<br>Does not clear any Enable Registers. |
| LSR<N>? | Query and clear the Limit Status Register<N>. The response format is <NR1><RMT>.<br>See Status Reporting section for details of the response. |
| LSE<n> <nrf> | Set the Limit Status Enable Register<N> to <NRF> |
| LSE<N>? | Returns the value in the value in the Limit Status Enable Register<N>.<br>The response format is<NR1><RMT>. |
| EER? | Query and clear Execution Error Register. The response format is <NR1><RMT>. |
| QER? | Query and clear Query Error Register. The response format is <NR1><RMT>. |
| *STB? | Report the value of the Status Byte. The response is: <NR1><RMT>.<br>Because there is no output queue, MAV can only be read by a GPIB serial poll, not by this query, as any previous message must have already been sent. |
| *SRE <NRF> | Sets the Service Request Enable Register to <NRF> |
| *SRE? | Report the value in the Service Request Enable Register.<br>The response is <NR1><RMT>. |
| *PRE <NRF> | Set the Parallel Poll Enable Register to the value <NRF>. |
| *PRE? | Report the value in the Parallel Poll Enable Register.<br>The response is <NR1><RMT>. |
| *IST? | Returns the state of the **ist** local message as defined by IEEE Std. 488.2.<br>The response is 0<RMT> if the local message is false, or 1<RMT> if true. |

# 10 - Remote Commands (MX- P versions only)

Interface Management Commands

| | |
|---|---|
| LOCAL | Go to local. Any subsequent command will restore the remote state. |
| IFLOCK <NRF> | Set or Clear the lock requiring the instrument to respond only to this interface, where <NRF> has the meaning: 0 = clear and 1 = set the lock.<br>It is an Execution Error (number 200) if the request is denied either because of conflict with a lock on this or another interface, or the user has disabled this interface from taking control using the web interface. |
| IFLOCK? | Query the status of the interface lock.<br>The response is: <NR1><RMT> where <NR1> is<br>= 0 if there is no active lock,<br>= 1 if this interface instance owns the lock or<br>=-1 if the lock is unavailable either because it is in use by another interface or the user has disabled this interface from taking control (via the web interface). |
| ADDRESS? | Returns the GPIB bus Address. The response is <NR1><RMT>. |
| IPADDR? | Returns the present IP address of the LAN interface, provided it is connected.<br>If it is not connected, the response will be the static IP if configured to always use that static IP, otherwise it will be 0.0.0.0 if waiting for DHCP or Auto-IP.<br>The response is nnn.nnn.nnn.nnn<RMT>, where each nnn is 0 to 255. |
| NETMASK? | Returns the present netmask of the LAN interface, provided it is connected. The response is nnn.nnn.nnn.nnn<RMT>, where each nnn is 0 to 255. |
| NETCONFIG? | Returns the first means by which an IP address will be sought.<br>The response is <CRD><RMT> where <CRD> is DHCP, AUTO or STATIC. |

The following commands specify the parameters to be used by the LAN interface.

**NOTE**

A power cycle is required after these commands are sent before the new settings are used (or returned in response to the queries listed above). The instrument does not attempt to check the validity of the IP address or netmask in any way other than checking that each part fits in 8 bits. The rear panel LAN RESET switch will override these commands and restore the defaults as described earlier.

| | |
|---|---|
| NETCONFIG <CPD> | Specifies the first means by which an IP address will be sought.<br><CPD> must be one of DHCP, AUTO or STATIC. |
| IPADDR <QUAD> | Sets the potential static IP address of the LAN interface (as on the webpage).<br>The parameter must be strictly a dotted quad for the IP address, with each address part an <NR1> in the range 0 to 255, (e.g. 192.168.1.101). |
| NETMASK <QUAD> | Sets the netmask to accompany the static IP address of the LAN interface.<br>The parameter must be strictly a dotted quad for the netmask, with each part an <NR1> in the range 0 to 255, (e.g. 255.255.255.0). |

# 11. MAINTENANCE

The Manufacturers or their agents overseas will provide a repair service for any unit developing a fault. Where owners wish to undertake their own maintenance work, this should only be done by skilled personnel in conjunction with the Service Guide, which may be purchased directly from the Manufacturers or their agents overseas.

## Cleaning

If the instrument requires cleaning use a cloth that is only lightly dampened with water or a mild detergent, to avoid damage to the case never clean with solvents.

**WARNING**



To avoid electric shock, or damage to the instrument, never allow water to get inside the case.

## Fuse

The correct fuse type is:

10 Amp 250V HBC time-lag (T), 5 x 20mm

Make sure that only fuses of the required rated current and specified type are used for replacement. The use of makeshift fuses and the short-circuiting of fuse-holders is prohibited.

To replace the fuse, first disconnect the instrument from the AC supply. Remove the 2 cover securing screws at the rear and slide back and lift off the cover. Replace the fuse with one of the correct type and refit the cover.

**NOTE**



The main function of the fuse is to make the instrument safe and limit damage in the event of failure of one of the switching devices. If a fuse fails it is therefore very likely that the replacement will also blow, because the supply has developed a fault; in such circumstances the instrument will need to be returned to the manufacturer for service.

## Calibration

To ensure that the accuracy of the instrument remains within specification the calibration must be checked (and if necessary adjusted) annually. The procedure is detailed in the Service Guide, which also lists the calibrated test equipment required.

## Firmware Update (MX-P only)

The firmware of the instrument can be updated through the USB port using a PC software utility available from the manufacturer. This uses a HID (human interface device) USB class driver which will already be installed on any PC with a USB port. Instructions for the update procedure are provided with the PC utility and the firmware file.

# 12. TECHNICAL SPECIFICATIONS

General specifications apply for the temperature range 5°C to 40°C. Accuracy specifications apply for the temperature range 18°C to 28°C after 15 minutes warm-up with no load and calibration at 23°C. Typical specifications are determined by design and are not guaranteed.

OUTPUT SPECIFICATIONS (Each Output)

<table>
<tr><th>MODELS</th><th colspan="2">MX100Q</th><th colspan="2">MX103Q</th></tr>
<tr><th>OUTPUT SPECIFICATIONS</th><th>Voltage and Current Range</th><th>Max power per output</th><th>Voltage and Current Range</th><th>Max power per output</th></tr>
<tr><td>Output 1</td><td rowspan="2">0 to 35V at 0.1 mA to 6A</td><td rowspan="4">210W</td><td rowspan="3">0 to 35V at 0.1 mA to 6A</td><td rowspan="3">210W</td></tr>
<tr><td>Output 2</td></tr>
<tr><td>Output 3</td><td rowspan="2">0 to 70V at 0.1 mA to 3A</td></tr>
<tr><td>Output 4</td><td>0 to 35V at 0.1 mA to 3A</td><td>105W</td></tr>
<tr><td>Output Power:</td><td colspan="4">Up to 420W total output power</td></tr>
</table>

| MODELS | MX100Q | MX103Q |
|---|---|---|
| Voltage Setting: | Resolution 1mV, (Resolution 10mV: 70V range outputs 3 & 4)<br>Accuracy: ± (0.05% of setting + 3mV), 70V range outputs 3 & 4: ± (0.1% of setting + 10mV) | Resolution 1mV<br>Accuracy: ± (0.05% of setting + 3mV) |
| Current Setting: | Resolution: 0.1mA<br>Accuracy: ± (0·3% + 3mA) to 3A, ± (0·5% + 3mA) to 6A | |
| Operating Mode: | Constant voltage or constant current with automatic cross-over.<br>CV or CC mode indication in display. | |
| Output Switch: | Independent electronic switching with ON indication. In addition, Multi-On and Multi-Off keys permit the outputs to be switched on/off synchronously. | |
| Multi-On/Multi-Off Action: | Individually settable delay between pressing of the Multi-On or Multi-Off key and the turning on or off of the respective output. Delays settable between 10ms and 20 seconds. Separate delays for On and Off can be set.<br>Outputs can also be omitted from Multi-On or Multi-Off control. | |
| Output Terminals: | Universal 4mm safety binding posts on 19mm (0·75”) spacing for Output; screwless terminals for Sense.<br>Duplicate power and sense terminals at rear. | |
| Ripple & Noise (20MHz bandwidth): | Outputs 1 & 2 loaded at 16V/6A, Outputs 3 & 4 loaded at 35V/3A, CV mode:<br>All Outputs typically <0.5mVrms, <5mV pk-pk; 1mVrms max.<br>Rear terminals: 10mV pk-pk max. 1.5mVrms max.<br>O/P3 & O/P4 on 70V/3A range:<br>Typically, <1mVrms, <10mV pk-pk; 1.5mVrms max.<br>Rear terminals: 15mV pk-pk max. | |
| Load Regulation: | For any load change, measured at the output terminals, using remote sense:<br>Constant voltage: <0.01% ± 5mV<br>Constant current: < 0.01% ±0.5mA | |
| Line Regulation: | Change in output for a 10% line change:<br>Constant voltage: <0.01% ± 5mV<br>Constant current: < 0.01% ± 250uA | |
| Transient Response: | To within 50mV of set level for a 5% to 95% load change:<br>Front terminals: <150us.<br>Rear terminals: <300us | To within 50mV of set level for a 5% to 95% load change:<br>Front terminals: <150us.<br>Rear terminals: <300us |

## 12 - Technical Specifications

| | | | | | | |
|---|---|---|---|---|---|---|
| | <500us (Outputs 1 & 2: 35V/6A range). | | | <500us (Outputs 1- 3: 35V/6A, Output 4: 35V/3A). | | |
| Temp. Coefficient: | Typically <100ppm/°C | | | | | |
| Voltage Programming Speed MX100QP only: (Typical figures) | Maximum time required for output to settle within 1% of its total excursion (for resistive load). Excludes command processing time. | | | | | |
| | | 90% Load | No Load | | 90% Load | No Load |
| 35V 3A | Up | 10ms | 10ms | Down | 60ms | 1400ms |
| 16V 6A | Up | 10ms | 10ms | Down | 10ms | 1000ms |
| 70V 3A | Up | 25ms | 12ms | Down | 300ms | 1400ms |
| 35V 6A | Up | 10ms | 10ms | Down | 20ms | 1400ms |

| MODELS | MX100Q | MX103Q |
|---|---|---|
| Output Protection: | Output will withstand an applied forward voltage of up to 50V (O/P1, O/P2), or 80V (O/P3, O/P4). Reverse protection by diode clamp for reverse currents up to 3A. | Output will withstand an applied forward voltage of up to 50V. Reverse protection by diode clamp for reverse currents up to 3A. |
| Over-voltage Protection (OVP) Trip: | Outputs 1&2: 1V to 40V. Output 3&4: 1V to 80V.<br><br>Output trips off for OVP. Resolution 100mV. Response time: typically, 100us. Accuracy: ± (2% + 0.5V) | Outputs 1-4: 1V to 40V<br><br>Output trips off for OVP. Resolution 100mV. Response time: typically, 100us. Accuracy: ± (2% + 0.5V) |
| Over-current Protection (OCP) Trip: | Measure-and-compare over-current protection is implemented in firmware. Output trips off for OCP. Setting resolution: 10mA. Response time: typically, 500ms. Accuracy: ± (0.3% + 2digits) | |
| Over-temperature Protection (OTP) Trip: | The output will be tripped off if a fault or blocked ventilation causes the internal temperature to rise excessively. | |

METER SPECIFICATIONS (Each Output)

| MODELS | MX100Q | MX103Q |
|---|---|---|
| Voltage/Current Meters | 5 digit meters for O/P 1 & O/P2; O/P 3 & O/P 4, 4 digit voltage meters O/P 3 & O/P 4(70V). | 5 digit meters |
| Voltage | Resolution 1mV, (Resolution 10mV: 70V range outputs 3 & 4)<br>Accuracy: ± (0.05% of setting + 3mV), 70V range outputs 3 & 4: ± (0.1% of setting + 10mV) | Resolution 1mV,<br>Accuracy: ± (0.05% of setting + 3mV) |
| Current | Resolution: 0.1mA<br>Accuracy: ± (0·3% + 3mA) to 3A, ± (0·5% + 3mA) to 6A | |
| Current Meter Averaging | User selectable On/Off per output with High, Medium or Low settings | |
| V x A: | Output 1 & 2: Resolution 0.001W to 100W, 0.01W above 100W. Output 3 & 4 Resolution 0.01W | Resolution 0.001W to 100W, 0.01W above 100W. |

# 12 - Technical Specifications

## SETTING MEMORY STORES

| MODELS | MX100Q | MX103Q |
|---|---|---|
| Stores for Individual Outputs: | 50 store positions for each output. Values stored are Range, Voltage, Current, OVP and OCP | |
| Stores for All Outputs: | 50 store positions operating on all four outputs simultaneously. Values stored are Range, Voltage, Current, OVP, OCP, Output On/Off, Current Meter Averaging, Multi-On/Multi-Off Setup | |
| Current | Resolution: 0.1mA<br>Accuracy: ± (0·3% + 3mA) to 3A, ± (0·5% + 3mA) to 6A | |
| Current Meter Averaging | User selectable On/Off per output with High, Medium or Low settings | |
| V x A: | Output 1 & 2: Resolution 0.001W to 100W, 0.01W above 100W. Output 3 & 4 Resolution 0.01W | Resolution 0.001W to 100W, 0.01W above 100W. |

## USER INTERFACE

| | |
|---|---|
| Display: | 5.2-inch Bar Type TFT LCD Display Module, 480 x 128 pixels. Multiple font sizes and graphic icons. |
| Soft Keys: | Eight illuminated multi-function keys annotated from the display. |
| Home Screen: | Simultaneous display of meters and settings for all outputs. Direct access to voltage or current setting for any output. |
| Individual Screens: | Display of meters and extended settings for an individual output (meters in larger font). Direct access for all settings for that output. |
| Numeric Setting: | Floating point numeric entry of voltage, current, OVP or OCP. |
| Spin Wheel Setting: | Voltage, current and other parameters can be adjusted using the spin wheel in quasi-analog fashion. Wheel can be disabled. |
| Menu Screen | System level functions are selected from a scrollable list. |
| Help Text | Multi-page help text is available for system level functions. |
| Front Panel Locking: | The lock key can be used to disable front panel control (hold to unlock). If required locking can alternatively be done using a secure passcode. |

## INTERFACES (MX100/3QP only)

Full digital remote control facilities are available through the USB, RS232, LAN and GPIB interfaces. Setting and readback resolutions are the same as for the Output and Meter specifications respectively.

| | |
|---|---|
| RS232: | Standard 9-pin D-connector. Baud rate 9600. |
| USB: | Standard USB 2.0 hardware connection. |
| LAN: | Ethernet 100/10base-T hardware connection. 1.5 LXI Core 2016. |
| GPIB (optional): | Conforms with IEEE488.1 and IEEE488.2. |
| Remote Command Processing Time: | Typically <120ms (80ms min, 160ms max) between receiving the command terminator for a step voltage change at the instrument and the output voltage beginning to change. |

## GENERAL

| | |
|---|---|
| AC Input: | 110V – 240V AC ± 10%, 50/60Hz. Installation Category II. |
| Power Consumption: | 650VA max. |
| Operating Range: | +5ºC to +40ºC, 20% to 80% RH. |
| Storage Range: | –40ºC to + 70ºC. |
| Environmental: | Indoor use at altitudes up to 2000m, Pollution Degree 2. |
| Safety: | Complies with EN61010-1. |
| EMC: | Complies with EN61326. |
| Size: | 320 x 130 x 375mm (WxHxD) x 3U height. |
| Weight: | 7.3kg (MX100Q) 7.5 kg (MX100QP) |
| Options: | 19-inch rack kit. |

EXTRAS

| MODELS | MX100Q | MX103Q |
|---|---|---|
| TripLink-OCP | Max TripLink time- <400ms | |
| TripLink-OVP | Max TripLink time- <300ms | |
| Powershare | Allows up to 210 watts from a single output (105 watts O/P4 on the MX103Q/QP), power is dynamically shared across the outputs, based on the set voltage and current. This eliminates the need to disable other outputs. | |
| Compatibility mode | Designed to work with the command set of the older MX models (Black and white display), this mode requires the user to disable a channel for high power usage. | |

# 13. DEFAULT VALUES

When supplied from the factory the power supply is set as follows:

| | MX100Q/QP | MX103Q/QP |
|---|---|---|
| *All Outputs* | | |
| Voltage | 1V | 1V |
| Current | 0.1A | 0.1A |
| Range | 35V 3A | 35V 3A |
| OVP | 40V | 40V |
| OCP | CH1 & CH2: 7A | CH1- CH3: 7A |
| | CH3 & CH4: 3.5A | CH4: 3.5A |
| Multi- On Off | CH1- CH4: Quick | CH1- CH4: Quick |
| Iavg | Off | Off |

System Level Settings

| | |
|---|---|
| Power-up state | Settings as at power-down, all outputs off |
| Beep sound | Enabled for key errors and trips Disabled for entry into CC mode. |
| Spin wheel action | Normal |
| Brightness | 80% |

The default values can be restored from the “Reset to factory Defaults” function – see *Setting to Factory Defaults*.

# 14. APPENDIX 1:

## Setting the Voltage/Current Range in Compatibility Mode

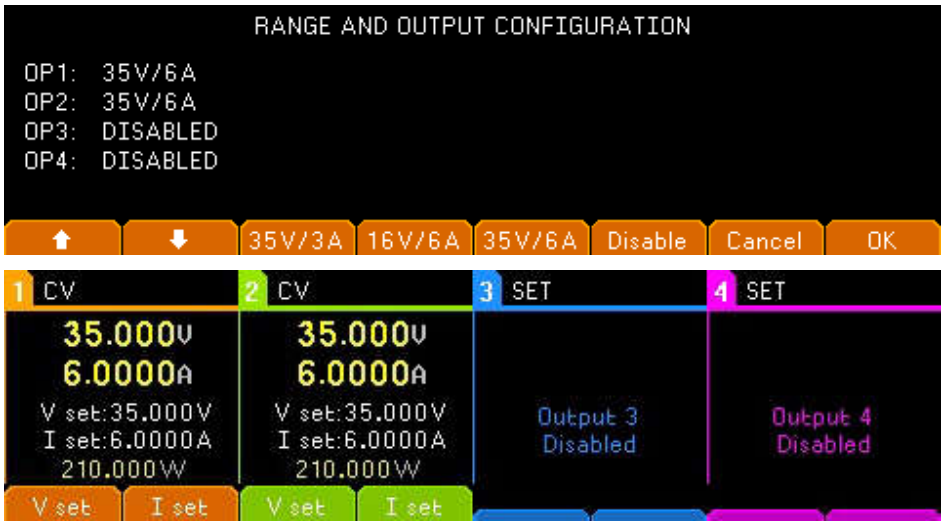


Selecting a high-power setting, e.g. 35V/6A will require the disabling of other outputs, see the following table for range combinations. Pressing the Range soft key brings up a menu screen which indicates the currently selected range and output with a flashing arrow.

All output ranges can be amended or disabled from this screen using the soft keys, select the output with the up and down arrow soft keys and press the desired range soft key. Pressing the cancel soft key will return to the output screen and the range will remain unchanged, pressing the OK soft key will action the changes made.

**NOTE**

A change of range can only be made when the output is off. If the output is on, a pop- up will appear and the output be turned off automatically when the change is made.

| Output 1 | Output 2 | Output 3 | Output 4 |
|---|---|---|---|
| 35V/3A | 35V/3A | 35V/3A | 35V/3A |
| 16V/6A | 35V/3A | 35V/3A | 35V/3A |
| 35V/3A | 16V/6A | 35V/3A | 35V/3A |
| 16V/6A | 16V/6A | 35V/3A | 35V/3A |
| 16V/6A | 16V/6A | 70V/1.5A* | 35V/3A |
| 16V/6A | 16V/6A | 35V/3A | 70V/1.5A* |
| 16V/6A | 16V/6A | 70V/1.5A* | 70V/1.5A* |
| 35V/3A | 16V/6A | 70V/1.5A* | 70V/1.5A** |
| 16V/6A | 35V/3A | 70V/1.5A* | 70V/1.5A* |
| 35V/3A | 35V/3A | 70V/1.5A* | 70V/1.5A* |
| 35V/3A | 35V/3A | 35V/3A | 70V/1.5A* |
| 35V/3A | 35V/3A | 70V/1.5A* | 35V/3A |
| 35V/3A | 35V/6A | 35V/3A | - |
| 35V/3A | 35V/6A | - | 35V/3A |
| 35V/3A | 35V/6A | 70V/1.5A* | - |
| 35V/3A | 35V/6A | - | 70V/1.5A* |

# 14 - Appendix 1:

| Output 1 | Output 2 | Output 3 | Output 4 |
|---|---|---|---|
| 16V/6A | 35V/6A | 35V/3A | - |
| 16V/6A | 35V/6A | - | 35V/3A |
| 16V/6A | 35V/6A | 70V/1.5A* | - |
| 16V/6A | 35V/6A | - | 70V/1.5A* |
| 35V/6A | 35V/3A | 35V/3A | - |
| 35V/6A | 35V/3A | - | 35V/3A |
| 35V/6A | 35V/3A | 70V/1.5A* | - |
| 35V/6A | 35V/3A | - | 70V/1.5A* |
| 35V/6A | 16V/6A | 35V/3A | - |
| 35V/6A | 16V/6A | - | 35V/3A |
| 35V/6A | 16V/6A | 70V/1.5A* | - |
| 35V/6A | 16V/6A | - | 70V/1.5A* |
| 35V/6A | - | 35V/3A | 35V/3A |
| 35V/6A | - | 70V/1.5A* | 35V/3A |
| 35V/6A | - | 35V/3A | 70V/1.5A* |
| 35V/6A | - | 70V/1.5A* | 70V/1.5A* |
| - | 35V/6A | 35V/3A | 35V/3A |
| - | 35V/6A | 70V/1.5A* | 35V/3A |
| - | 35V/6A | 35V/3A | 70V/1.5A* |
| - | 35V/6A | 70V/1.5A* | 70V/1.5A* |
| 35V/3A | 35V/3A | 70V/3A* | - |
| 16V/6A | 35V/3A | 70V/3A* | - |
| 35V/3A | 16V/6A | 70V/3A* | - |
| 16V/6A | 16V/6A | 70V/3A* | - |
| 35V/3A | 35V/3A | - | 70V/3A* |
| 16V/6A | 35V/3A | - | 70V/3A* |
| 35V/3A | 16V/6A | - | 70V/3A* |
| 16V/6A | 16V/6A | - | 70V/3A* |
| 35V/3A | - | 70V/3A* | 70V/1.5A* |
| - | 35V/3A | 70V/3A* | 70V/1.5A* |
| 16V/6A | - | 70V/3A* | 70V/1.5A* |
| - | 16V/6A | 70V/3A* | 70V/1.5A* |
| 35V/3A | - | 70V/3A* | 35V/3A |
| - | 35V/3A | 70V/3A* | 35V/3A |
| 16V/6A | - | 70V/3A* | 35V/3A |
| - | 16V/6A | 70V/3A* | 35V/3A |
| 35V/6A | 35V/6A | - | - |
| 35V/6A | - | 70V/3A* | - |
| 35V/6A | - | - | 70V/3A* |
| - | 35V/6A | 70V/3A* | - |
| - | 35V/6A | - | 70V/3A* |
| - | - | 70V/3A* | 70V/3A* |

*MX100Q /QP only

The previous manual 'MX100Q & MX100QP Instruction Manual (P/N 48511-1820 issue 2)' contains the remote commands for this mode, this can be found at www.aimtti.co.uk

## EXCELLENCE THROUGH EXPERIENCE

**Aim-TTi is the trading name of Thurlby Thandar Instruments Ltd. (TTi), one of Europe's leading manufacturers of test and measurement instruments.**

**The company has wide experience in the design and manufacture of advanced test instruments and power supplies built up over more than thirty years.**

**The company is based in the United Kingdom, and all products are built at the main facility in Huntingdon, close to the famous university city of Cambridge.**

## TRACEABLE QUALITY SYSTEMS

**TTi is an ISO9001 registered company operating fully traceable quality systems for all processes from design through to final calibration.**

**ISO9001:2015**

**Certificate number FM 20695**

## WHERE TO BUY AIM-TTI PRODUCTS

**Aim-TTi products are widely available from a network of distributors and agents in more than sixty countries across the world.**

**To find your local distributor, please visit our website which provides full contact details.**

**Designed and built in Europe by:**

**Thurlby Thandar Instruments Ltd.**
Glebe Road, Huntingdon, Cambridgeshire.
PE29 7DR United Kingdom
Tel: +44 (0)1480 412451 Fax: +44 (0)1480 450409
Email: sales@aimtti.com Web: www.aimtti.com

Book Part No. 48511-1950 Issue 1