LED CONTINUOUS LIGHT
PD 2100-M-AS-i



Machine lights in an elegant pyramid design, equipped with LED light source for extremely long service life (>50,000 hrs).

- Vibration/shock-resistant.
- Low power consumption.
- Minimised maintenance costs.
- Non-compromising safety.
- Outstanding illumination of the coloured lens due to scattering lens.
- For safety-relevant applications, such as X-ray and laser equipment.
- Supplying of the light directly by bus system.
- Control and function monitoring directly via AS interface.

IP 55
protection system

+45 °C
–25 °C
PD 2100-M-AS-i

PRODUCT		PD 2100-M-AS-i
DATA		
Rated voltage		28 V
Nominal current consumption		approx. 250 mA
Operating range		26.5–32.6 V
Alarm output		via AS-i Bus
Operating mode		continuous light
Light source		LED
Light intensity (DIN 5037) clear lens		5 cd
Max. viewing distance		52 m
Operating temperature		–25 °C ... +45 °C
Storage temperature		–40 °C ... +70 °C
Relative humidity		90 %
Protection system (EN 60529)		IP 55 (if mounted vertically/horizontally)
Service life of the light source		>50,000 hrs
Material	lens	polycarbonate (PC)
	housing	ABS, light grey similar to RAL 7035
	baseplate	ABS, light grey similar to RAL 7035
Type of connection		M12 plug connector, 4-pole
	Pin 1	AS-i +
	Pin 2	NC
	Pin 3	AS-i –
	Pin 4	NC
Addressing socket		DC jack, Ø 1.3 mm — AS-i + / AS-i –
AS-i specification		AS-i 2.1, A/B capable EN 50295
Weight		300 g

DIMENSIONS

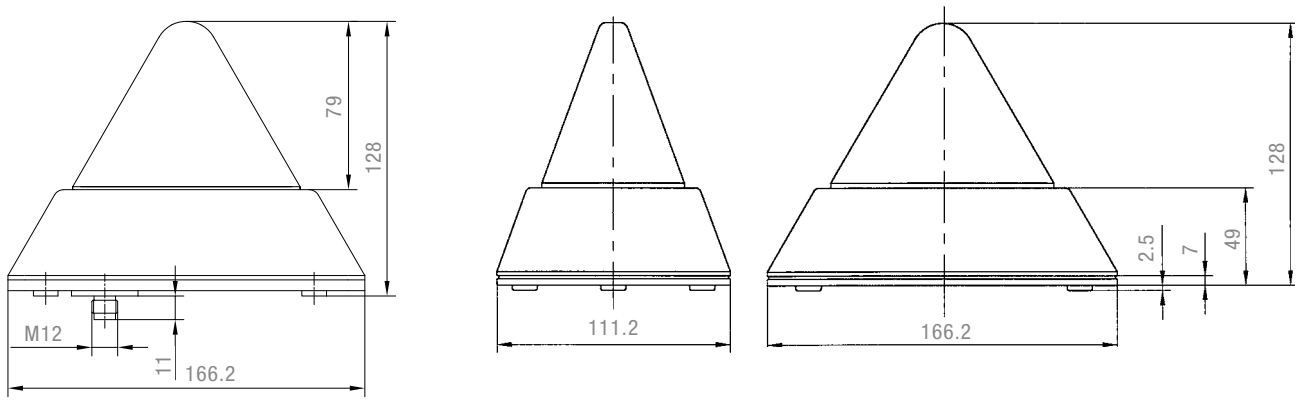

MOUNTING HOLES

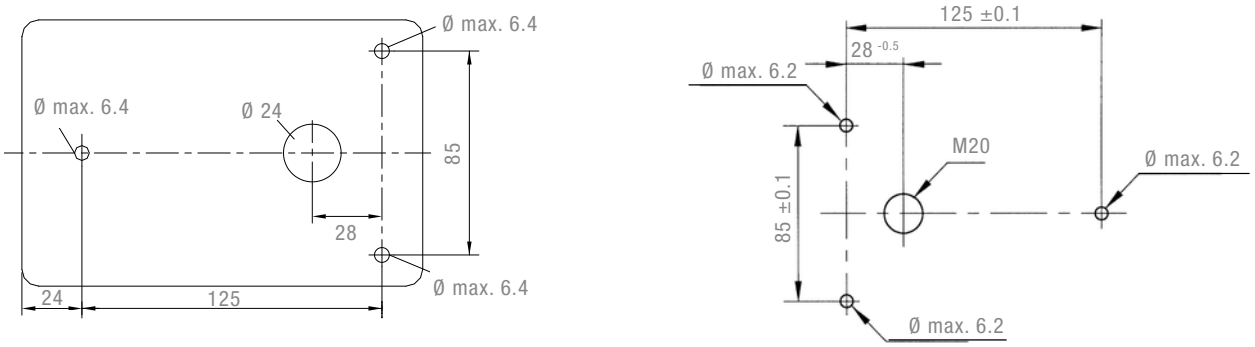

ARTICLE NO.	PD 2100-M-AS-i
LENS COLOUR	26.5–32.6 V
○	21120502004
●	21120505004

Article numbers for other colours on request.

CONNECTION DIAGRAM

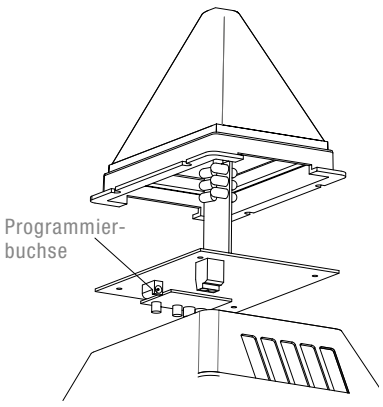

OPTIONS/ACCESSORIES



Article no.
28710500040

CONFORMITY TO STANDARDS

The visual characteristics of continuous lights conform to the European standard DIN EN 842; **"Machine safety – visual alarm signals".**
Requirements contained in the DIN EN 981 standard; **"Machine safety – system of acoustic and visual alarm and information signals",** can be fulfilled.

The colours "red" for the emergency signal and "yellow" for the warning signal conform to the requirements of IEC 73 / DIN EN 60073 / VDE 0199; **"Coding of display devices and control elements using colours and supplementary means".**

References to visual alarm devices can be found in the following standards:

EN 60825-1	Radiation safety of laser devices, identical to IEC 825 and DIN-VDE 0837
DIN EN 54	Fire alarm systems
DIN 54113-2	Radiation protection regulations for the technical operation of X-ray equipment up to 500 kV