# Actuator

Series IN65/I81-modular system

| Description **RM-EINR.** | Article number **3918172362** |
|---|---|

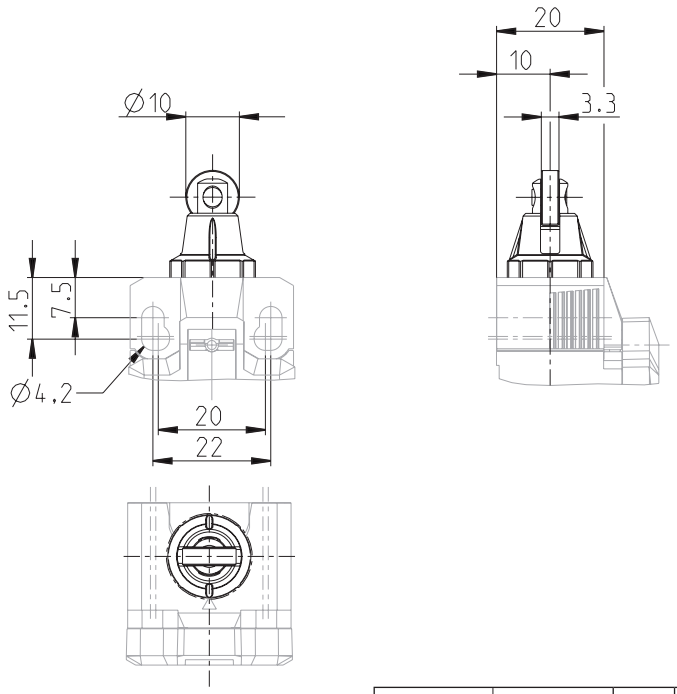


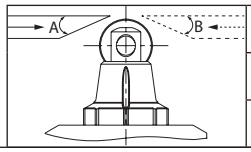


| m/s | 0,1 | 0,5 | 1 | 2 | 5 |
|---|---|---|---|---|---|
| A | 20 ° | 20 ° | 10 ° | 5 ° | - |
| B | 20 ° | 20 ° | 10 ° | 5 ° | - |

## Switching symbol depending on the switching function used

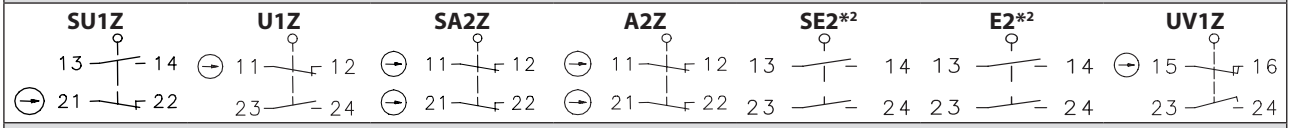


## Operating diagram depending on the switching function used and the switch series

## Operating diagram when using the actuator on an IN65...

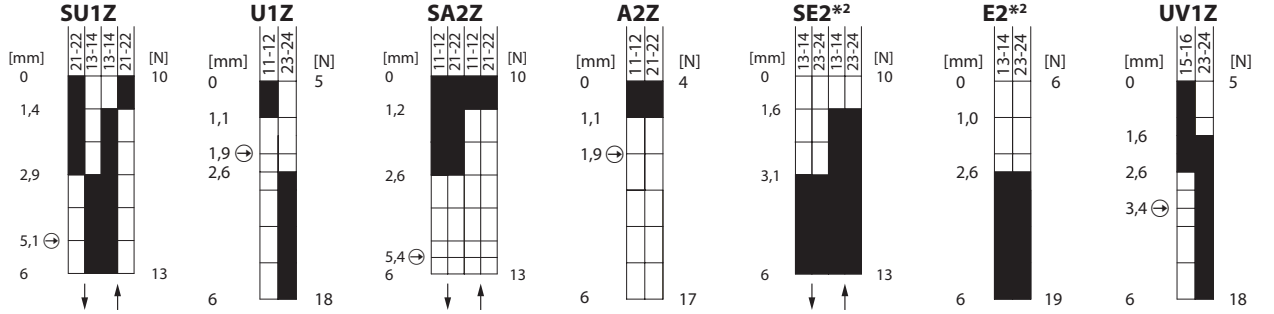

## Operating diagram when using the actuator on an I81...

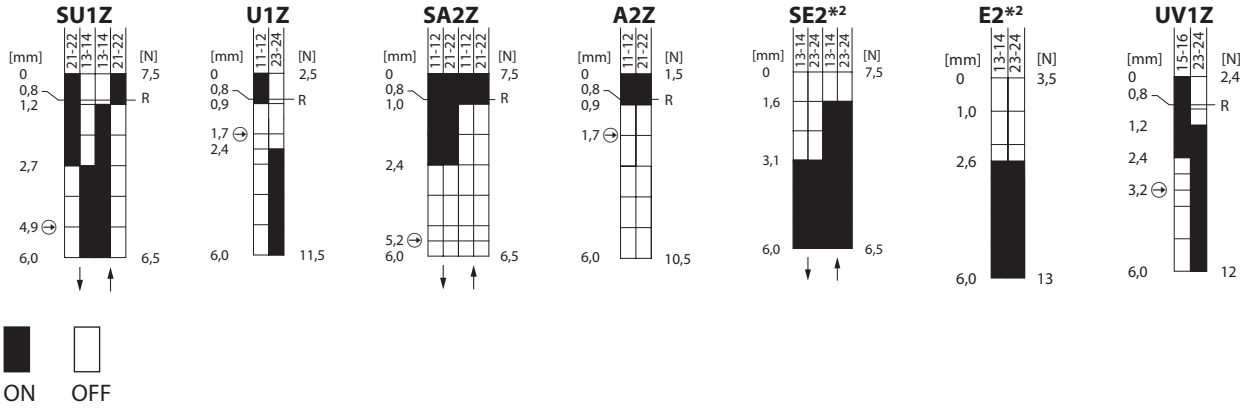


Tolerance:
Operating point ± 0,25 mm;
Direct opening action +0,25 mm
Operating force ± 10 %

| Mechanical data | | |
|---|---|---|
| Actuator | | Roller (Steel) |
| Operating temperature | | -30 °C ... +75 °C |
| Storage temperature | | -40 °C ... +80 °C |
| Protection type | | IP66 / IP67 acc. EN 60529 |
| Operating rate | V | 0,06 m/min ≤ V ≤ 30 m/min |
| Switching frequency | | ≤ 100 / min. |
| Mechanical life | | 10 x $10^6$ operating cycles*1 |
| Mission time | | ≤20 years |
| Weight | | ≈ 0,015 kg |
| Installation position | | operator definable |

## Actuation

The actuating device is preferably started from 2 sides.
By lifting the clamp the actuation assembly can be rotated in 45° increments such that 8 actuation directions are possible.
The actuation assembly is to be again fastened to the housing by lowering the clamp.

## Notes

*1 The specification represents the maximum value for the respective individual component of the kit. The decisive mechanical life is determined for the completely assembled terminal device by the individual component with the lowest value.
*2 These switching functions have no safety function / direct opening action. The built-in switch is therefore not available as a single component, but is only available as factory assembled in a housing.

The degree of protection (IP code) specified applies solely in the mounted state.

Properties applies only to the fully assembled device.