SHEET	3
ISSUE	01
DRAWING NUMBER	279.48

CHANGE No.

DIMENSIONS IN MILLIMETRES UNLESS STATED OTHERWISE

DO NOT SCALE – IF IN DOUBT ASK

REMOVE SHARP EDGES & BURRS

THIRD ANGLE PROJECTION

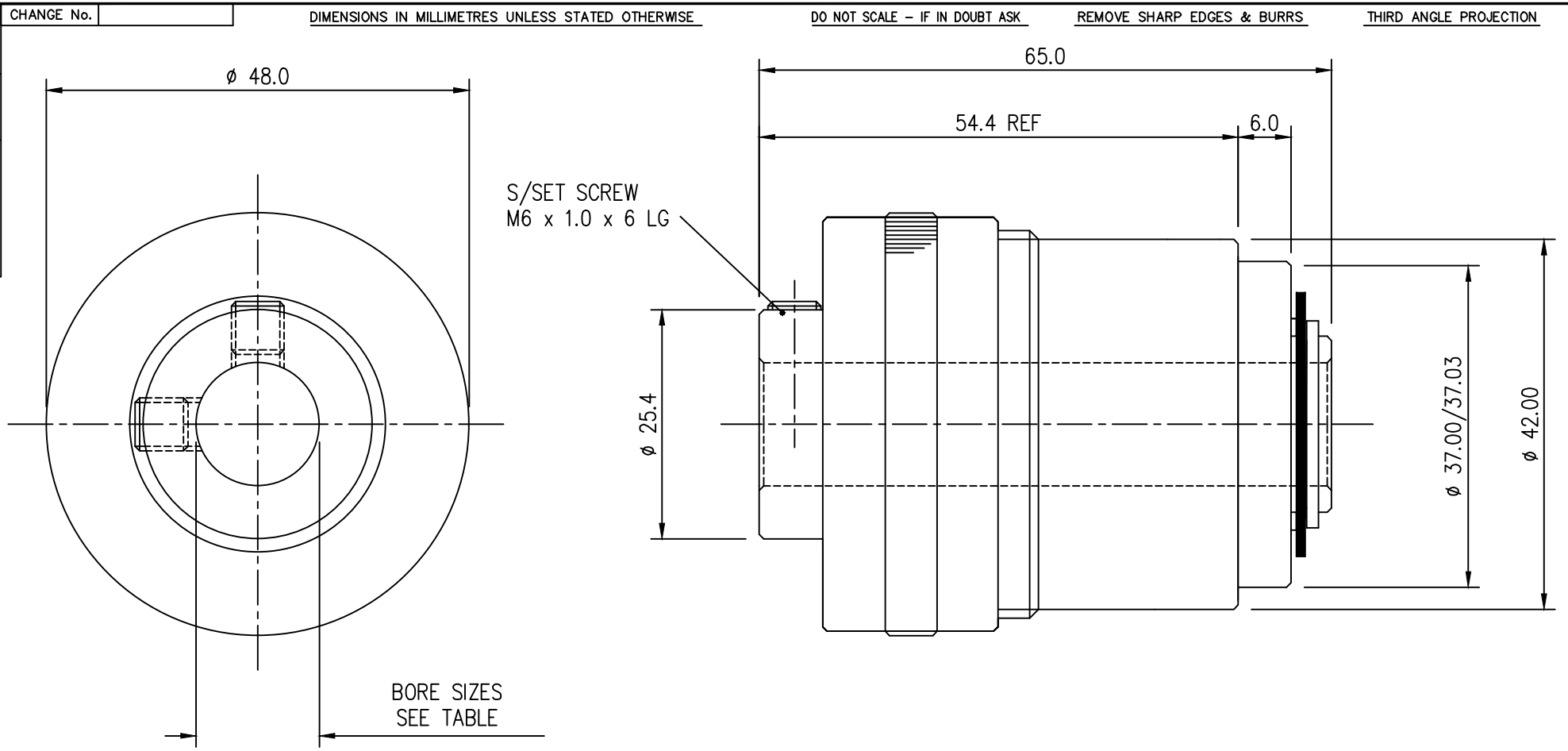

METRIC FINISHED BORES
BORE SIZES +0.03/–0
MINIMUM BORE 8.00mm MAXIMUM BORE 16.00mm

IMPERIAL FINISHED BORES
BORE SIZES +0.0012"/–0
MINIMUM BORE 0.3125" MAXIMUM BORE 0.625"

SEE DRAWING J 1094 FOR ASSEMBLY PROCEDURE.

ITEM	PART NUMBER	OPERATIONS/DESCRIPTION	QTY	MADE FROM/DRG NR

Huco Dynatork

THIS DRAWING AND SPECIFICATION IS THE EXCLUSIVE PROPERTY OF HUCO DYNATORK. ISSUED IN STRICT CONFIDENCE AND SHALL NOT BE REPRODUCED, COPIED OR USED FOR ANY PURPOSE WHATSOEVER, EXCEPT THE MANUFACTURE OF ARTICLES FOR HUCO DYNATORK.

TOLERANCES UNLESS OTHERWISE STATED
METRIC:– 2 DECIMAL PLACES ± 0.1mm – 1 DECIMAL PLACE ± 0.4mm
IMPERIAL:– 3 DECIMAL PLACES ± (.004")
ANGULAR:– ± 2 DEGREES

TITLE: V–TK 48 6 PL CLUTCH

PROJECT FILE

A3 DRAWING

DRAWN	DATE	SCALE	DRAWING NUMBER	ISSUE	SHEET	CHECKED
M.ST.C.A	11/9/08	2:1	279.48	01	3	M.ST.C.A